RIOM

REVISIONS				
ZONE	LTR	DESCRIPTION	DATE	APPR.

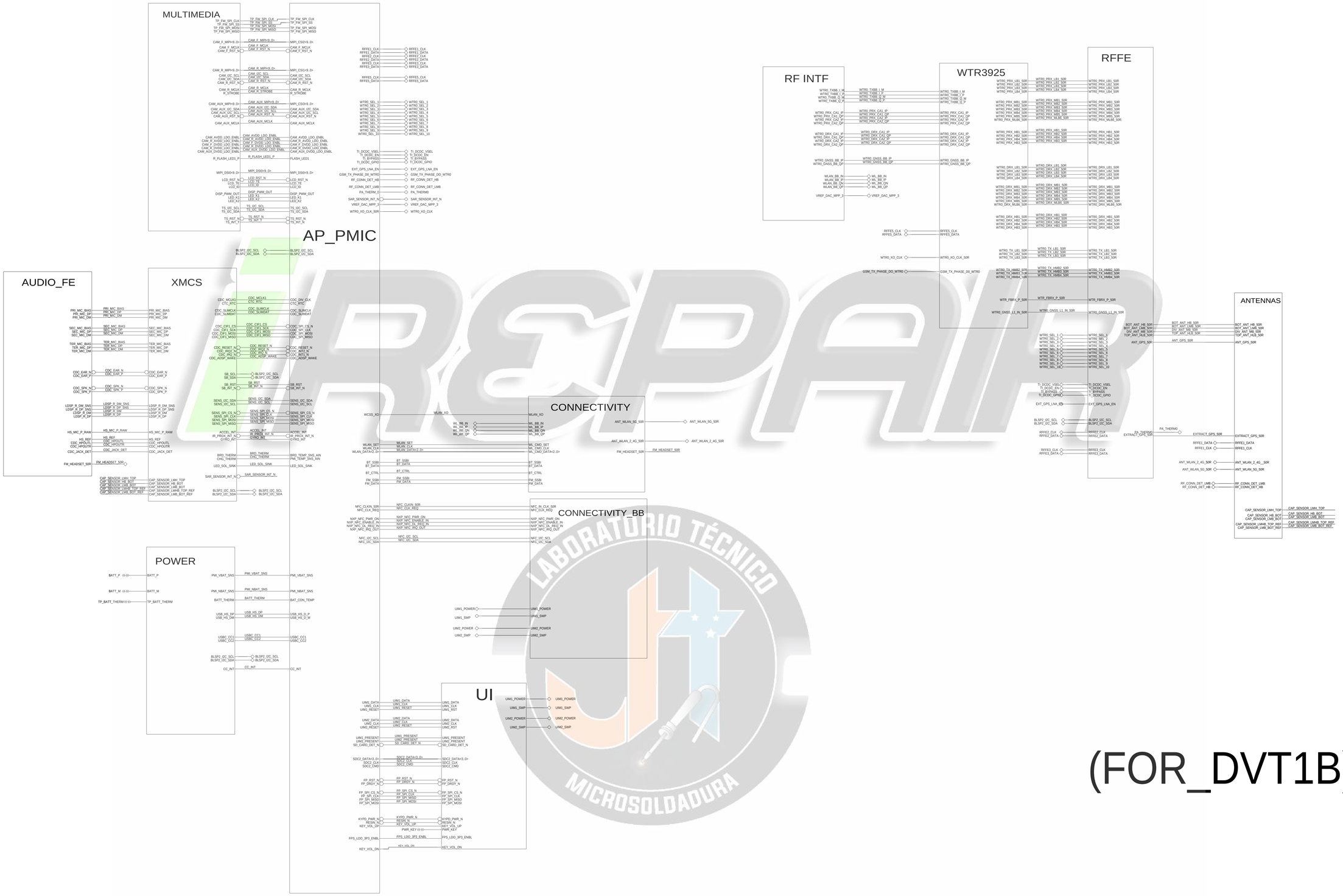

(FOR_DVT1B)

LABORATORIO TÉCNICO MICROSOLDADURA

APPROVALS	MOTOROLA MOBILE DEVICES
ENGINEER: ZHANGJIA	BLOCK TITLE: riom
LAST MODIFIED BY: ZHANGJIA Mon Aug 06 14:55:36 2018	
MOTOROLA CONFIDENTIAL RESTRICTED	E — PROJECT NAME: riom.cpm — REV: 01
THE DRAWING ON THIS PRINT AND INFORMATION THEREWITH ARE PROPRIETARY TO MOTOROLA AND SHALL NOT BE USED OR DISCLOSED IN WHOLE OR IN PART WITHOUT MOTOROLA'S CONSENT. © COPYRIGHT, MOTOROLA. THIS DOCS NOT WAIVE PUBLICATION.	CAD FILE NAME: — PAGE 1 OF 63

RIOM ME/SHIELDS

FACTORY TEST POINT FOR USB

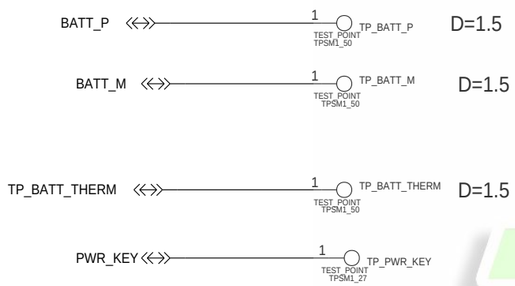

RF CABLE CLIP

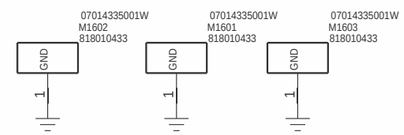

GROUND CONTACTS

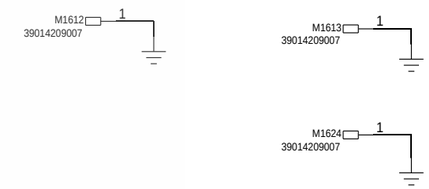

PLAT(STELL SHEET)

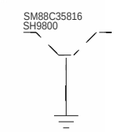

PCB SHIELD

ADD EVB V02

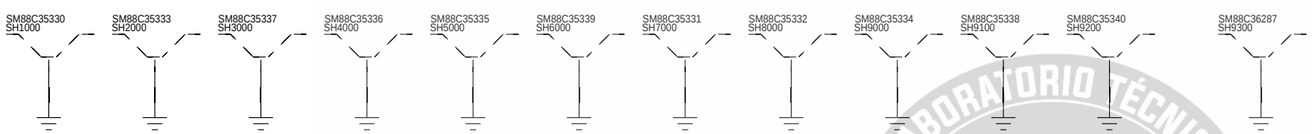

NPTH_15

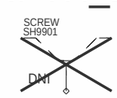

NPTH_17

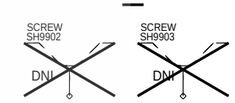

SCREW

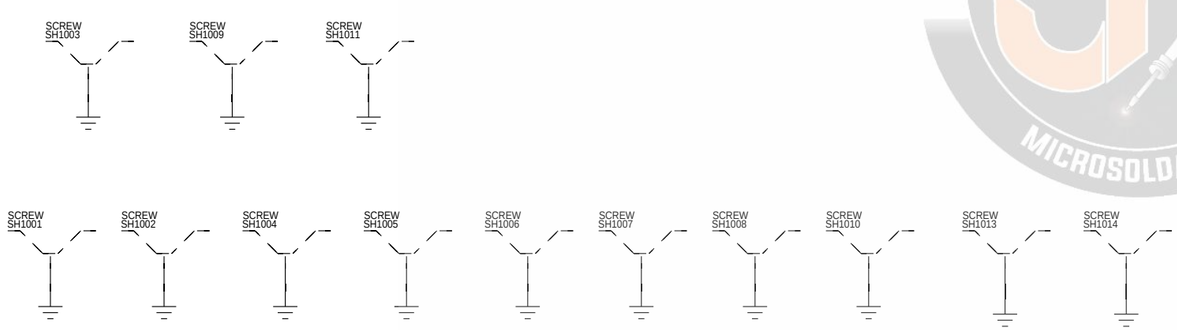

MOTOROLA MOBILITY CONFIDENTIAL RESTRICTED-MDB TRACKED TRACKEDANDBLOCKED

APPROVALS	MOTOROLA MOBILE DEVICES	
ENGINEER: ZHANG BEI	BLOCK TITLE: riom	
LAST MODIFIED BY: ZHANG BEI Tue Sep 25 17:29:02 2018		
MOTOROLA CONFIDENTIAL RESTRICTED THE DRAWING ON THIS PRINT AND INFORMATION THEREWITH ARE PROPRIETARY TO MOTOROLA AND SHALL NOT BE USED OR DISCUSSED IN WHOLE OR IN PART WITHOUT MOTOROLA'S CONSENT. © COPYRIGHT, MOTOROLA. THIS DOES NOT IMPLY PUBLICATION	B PROJECT NAME riom.cpm	REV 01
	CAD FILE NAME:	PAGE 2 OF 63

iREPAIR
LABORATORIO TÉCNICO MICROSOLDADURA

SDM: CTRL

REF 1010-1019

WCSS_XO MUST CONNECT TO GND IF NOT USE 5GHZ WIFI

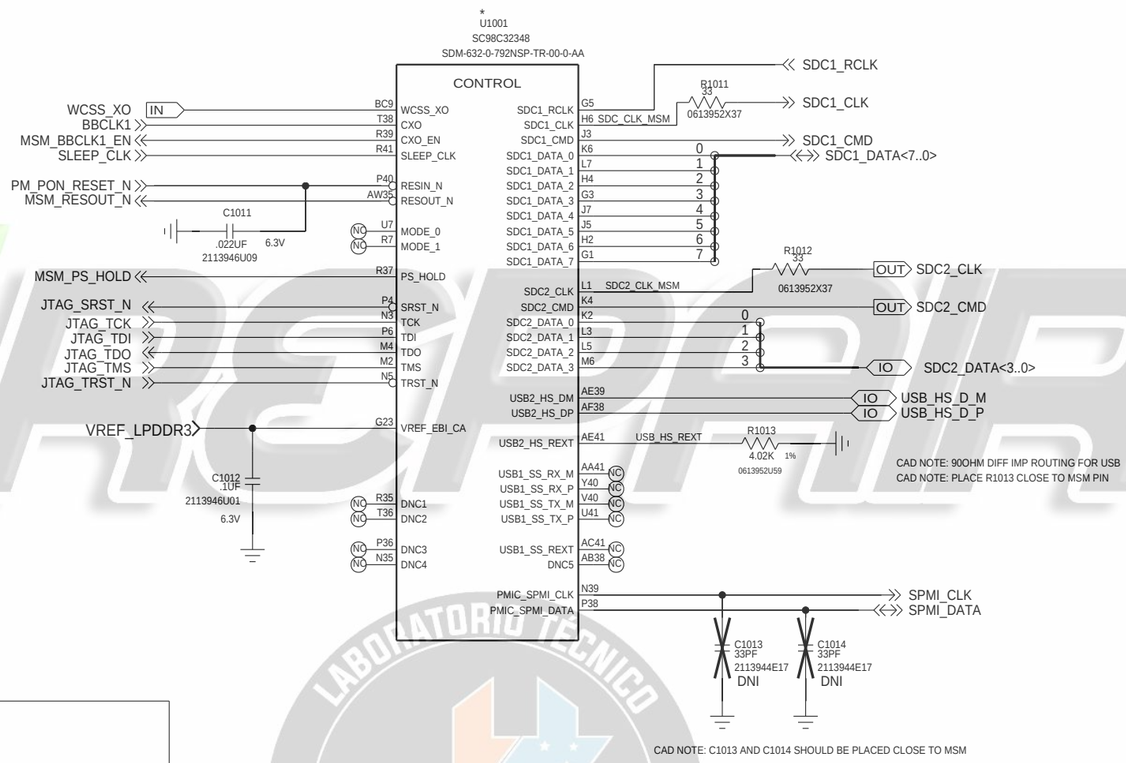

FORCE FLASH SUPPORT
WITH VOL UP KEY

(DNI FOR PRODUCTION)

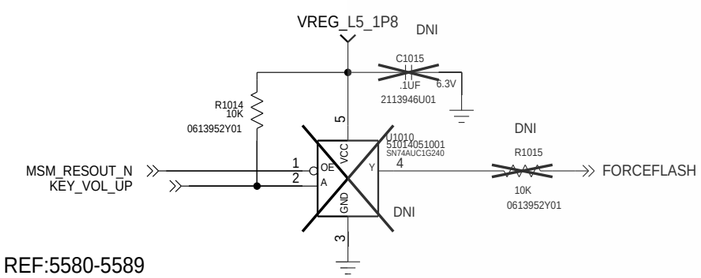

REF:5580-5589

APPROVALS	MOTOROLA MOBILE DEVICES
ENGINEER: ZHANG BEI	BLOCK TITLE: ap_pmic
LAST MODIFIED BY: ZHANG BEI Tue Sep 25 17:29:03 2018	
MOTOROLA CONFIDENTIAL RESTRICTED	B — PROJECT NAME: riom.cpm — REV: 01
THE DRAWING ON THIS PRINT AND INFORMATION THEREWITH ARE PROPRIETARY TO MOTOROLA AND SHALL NOT BE USED OR DISCUSSED IN WHOLE OR IN PART WITHOUT MOTOROLA'S CONSENT. © COPYRIGHT, MOTOROLA. THIS DOES NOT IMPLY PUBLICATION	CAD FILE NAME: — PAGE 3 OF 63

iREPAIR LABORATORIO TECNICO MICROSOLDADURA

SDM: DEBUG

REF 1000-1009

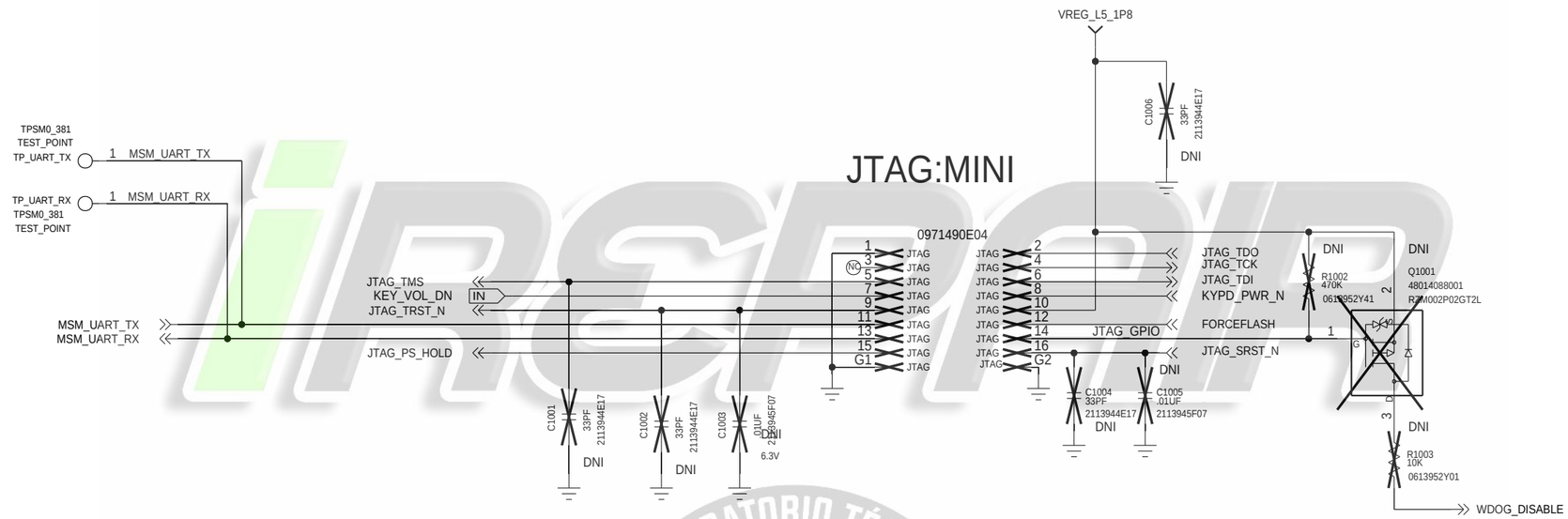

APPROVALS	MOTOROLA MOBILE DEVICES
ENGINEER: ZHANG BEI	BLOCK TITLE: ap_pmic
LAST MODIFIED BY: ZHANG BEI Tue Sep 25 17:29:04 2018	
MOTOROLA CONFIDENTIAL RESTRICTED	B — PROJECT NAME: riom.cpm — REV: 01
THE DRAWING ON THIS PRINT AND INFORMATION THEREWITH ARE PROPRIETARY TO MOTOROLA AND SHALL NOT BE USED OR DISCUSSED IN WHOLE OR IN PART WITHOUT MOTOROLA'S CONSENT. © COPYRIGHT, MOTOROLA. THIS DOES NOT IMPLY PUBLICATION	CAD FILE NAME: — PAGE 4 OF 63

iRSPROP LABORATORIO TÉCNICO MICROSOLDADURA

SDM: MIPI/DSI/CSI/EBI0

REF 1020-1029

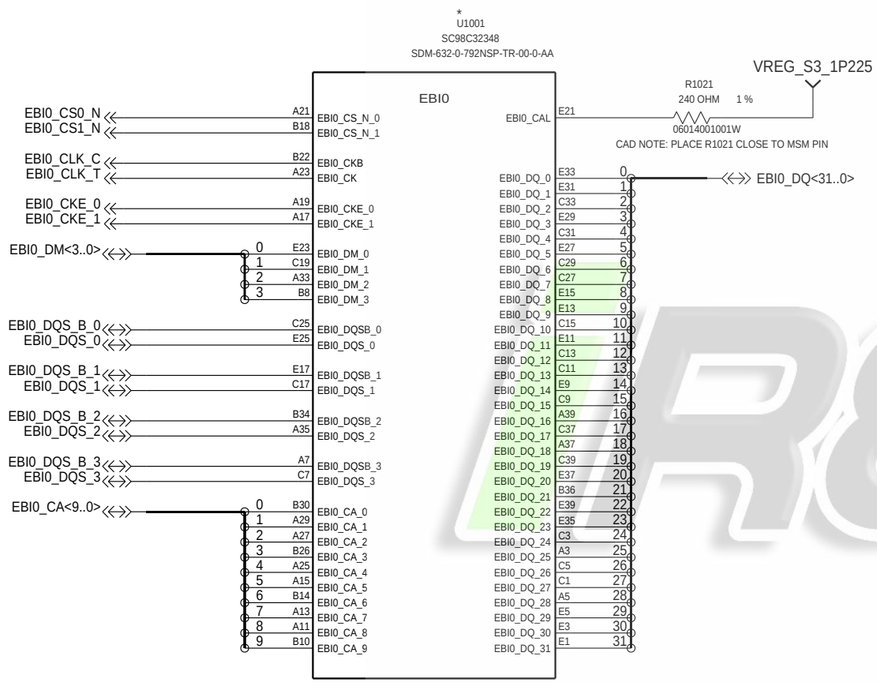

GND SHIELD FOR EBI0 AS A GROUP IF POSSIBLE

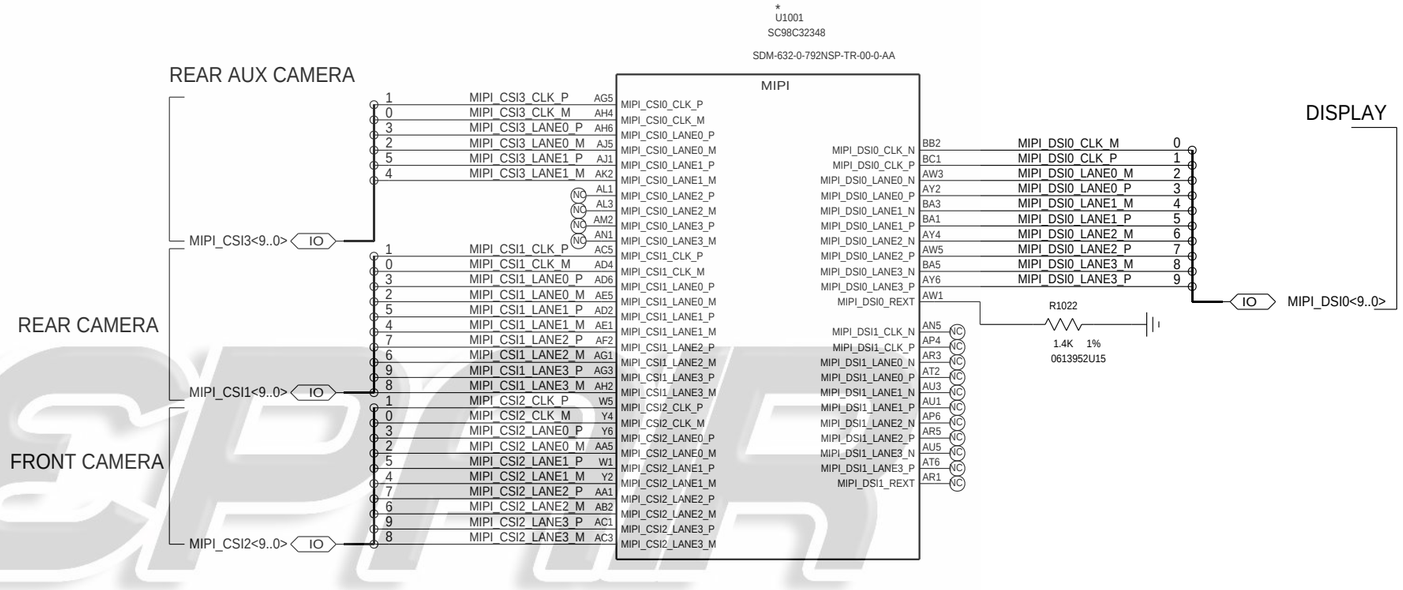

GND SHIELD FOR CSI2 AS A GROUP IF POSSIBLE
GND SHIELD FOR CSI1 AS A GROUP IF POSSIBLE
GND SHIELD FOR CSI3 AS A GROUP IF POSSIBLE
GND SHIELD FOR DSI0 AS A GROUP IF POSSIBLE
ADD GND STITCHING VIAS FOR EACH SIGNAL GROUP (EBI,CSI,DSI) WHEN POSSIBLE

LABORATORIO TÉCNICO MICROSOLDADURA

APPROVALS	MOTOROLA MOBILE DEVICES
ENGINEER: ZHANG BEI	BLOCK TITLE: ap_pmic
LAST MODIFIED BY: ZHANG BEI Tue Sep 25 17:29:03 2018	
MOTOROLA CONFIDENTIAL RESTRICTED	B — PROJECT NAME: riom.cpm — REV: 01
THE DRAWING ON THIS PRINT AND INFORMATION THEREWITH ARE PROPRIETARY TO MOTOROLA AND SHALL NOT BE USED OR DISCUSSED IN WHOLE OR IN PART WITHOUT MOTOROLA'S CONSENT. © COPYRIGHT, MOTOROLA. THIS DOES NOT IMPLY PUBLICATION	CAD FILE NAME:
	PAGE 5 OF 63

SDM: GPIO (0-141)

REF 1030-1049

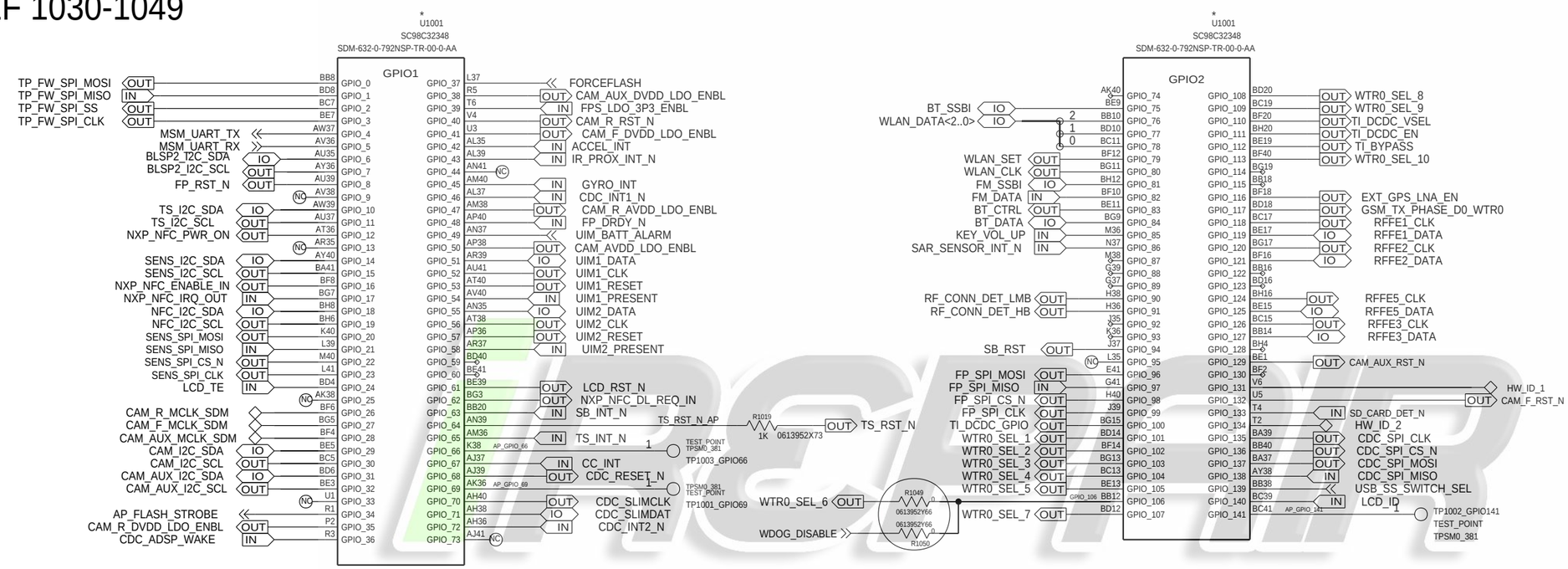

APPROVALS	MOTOROLA MOBILE DEVICES
ENGINEER: ZHANG BEI	BLOCK TITLE: ap_pmic
LAST MODIFIED BY: ZHANG BEI Tue Sep 25 17:29:06 2018	
MOTOROLA CONFIDENTIAL RESTRICTED THE DRAWING ON THIS PRINT AND INFORMATION THEREWITH ARE PROPRIETARY TO MOTOROLA AND SHALL NOT BE USED OR DISCUSSED IN WHOLE OR IN PART WITHOUT MOTOROLA'S CONSENT. © COPYRIGHT, MOTOROLA. THIS DOES NOT IMPLY PUBLICATION	B — PROJECT NAME: riom.cpm — REV: 01
	CAD FILE NAME: — PAGE 6 OF 63

LABORATORIO TÉCNICO MICROSOLDADURA

SDM: PWR1

REF 1050-1089

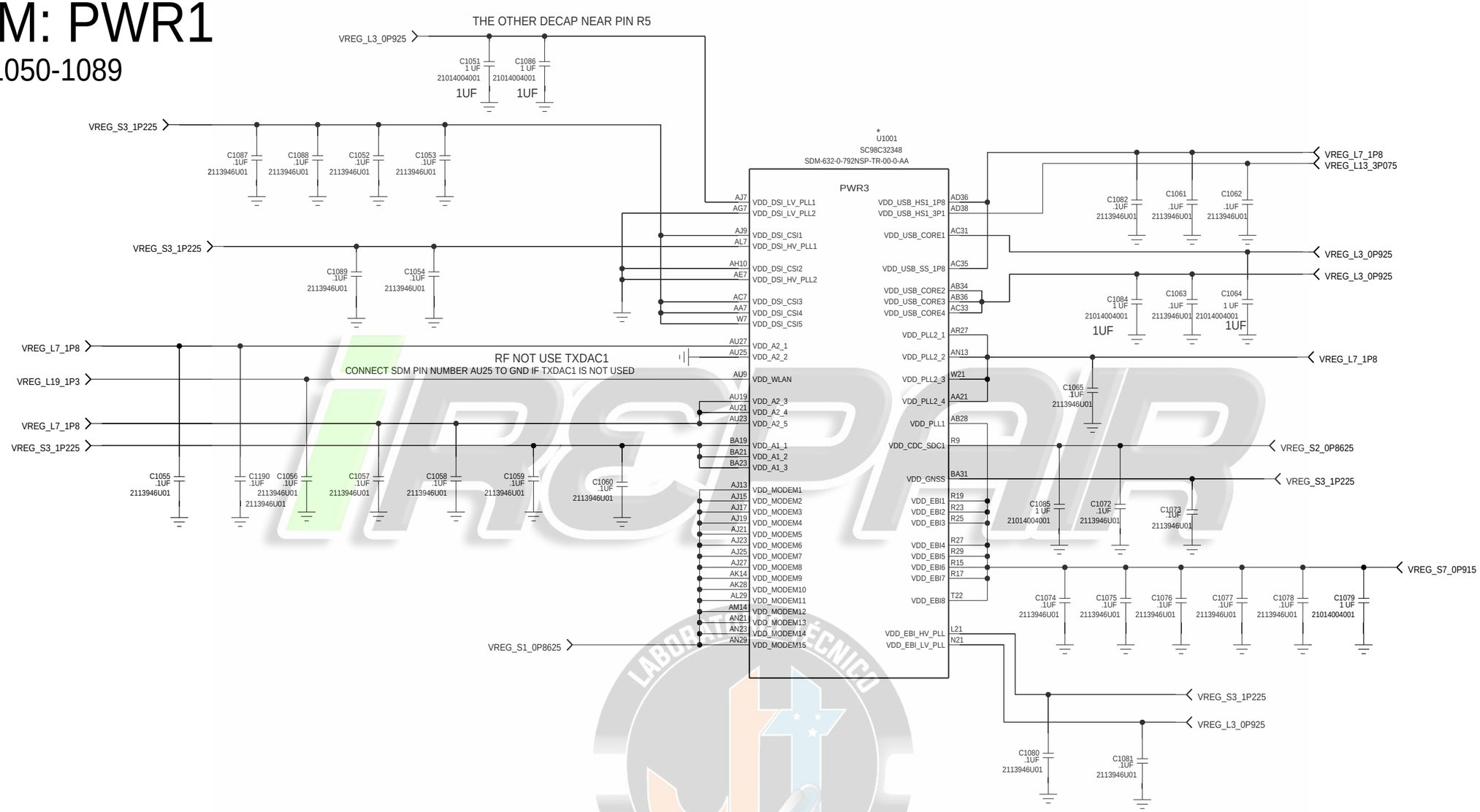

APPROVALS	MOTOROLA MOBILE DEVICES
ENGINEER: ZHANG BEI	BLOCK TITLE: ap_pmic
LAST MODIFIED BY: ZHANG BEI Tue Sep 25 17:29:07 2018	
MOTOROLA CONFIDENTIAL RESTRICTED	B — PROJECT NAME: riom.cpm — REV: 01
THE DRAWING ON THIS PRINT AND INFORMATION THEREWITH ARE PROPRIETARY TO MOTOROLA AND SHALL NOT BE USED OR DISCUSSED IN WHOLE OR IN PART WITHOUT MOTOROLA'S CONSENT. © COPYRIGHT, MOTOROLA. THIS DOES NOT IMPLY PUBLICATION	CAD FILE NAME: — PAGE 7 OF 63

LABORATORIO TÉCNICO MICROSOLDADURA

SDM: PWR2

REF 1090-1119

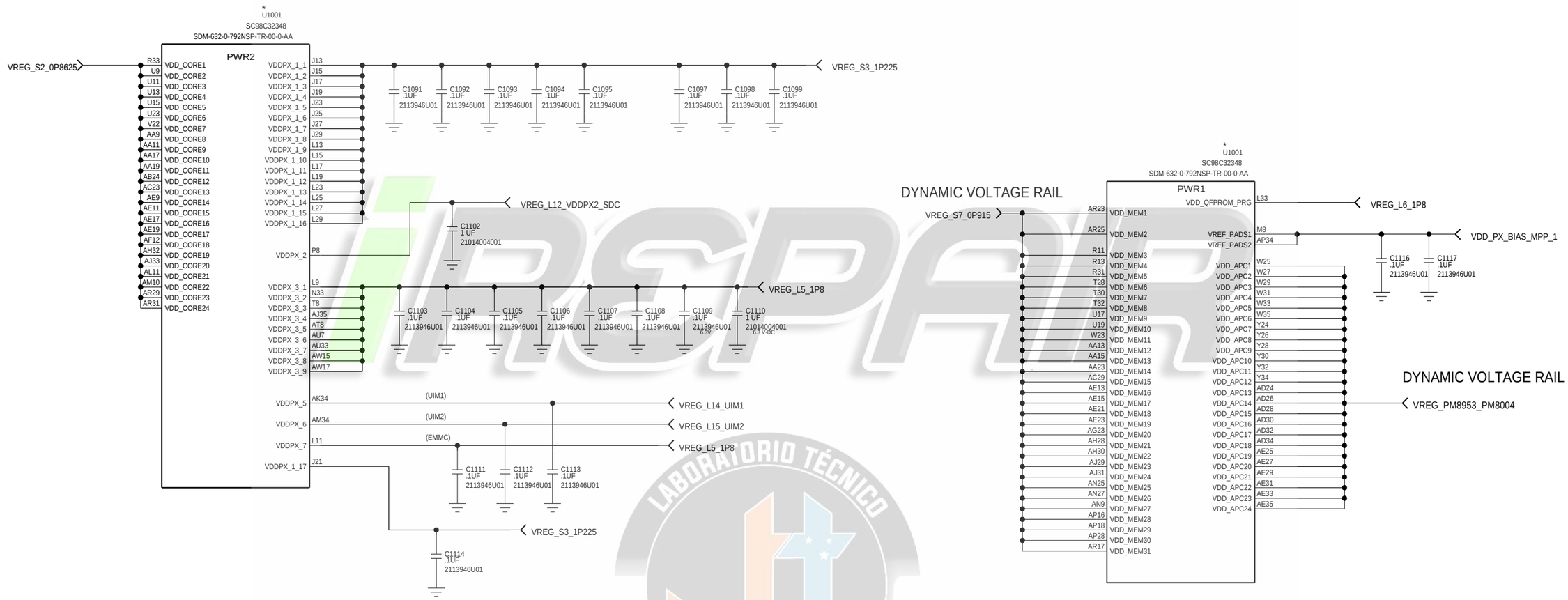

APPROVALS	MOTOROLA MOBILE DEVICES
ENGINEER: ZHANG BEI	BLOCK TITLE: ap_pmic
LAST MODIFIED BY: ZHANG BEI Tue Sep 25 17:29:08 2018	
MOTOROLA CONFIDENTIAL RESTRICTED	B — PROJECT NAME: riom.cpm — REV: 01
	CAD FILE NAME: — PAGE 8 OF 63

THE DRAWING ON THIS PRINT AND INFORMATION THEREWITH ARE PROPRIETARY TO MOTOROLA AND SHALL NOT BE USED OR DISCUSSED IN WHOLE OR IN PART WITHOUT MOTOROLA'S CONSENT.
© COPYRIGHT, MOTOROLA. THIS DOES NOT IMPLY PUBLICATION

LABORATORIO TÉCNICO MICROSOLDADURA

SDM: BYPASS CAPS

REF 1120-1199

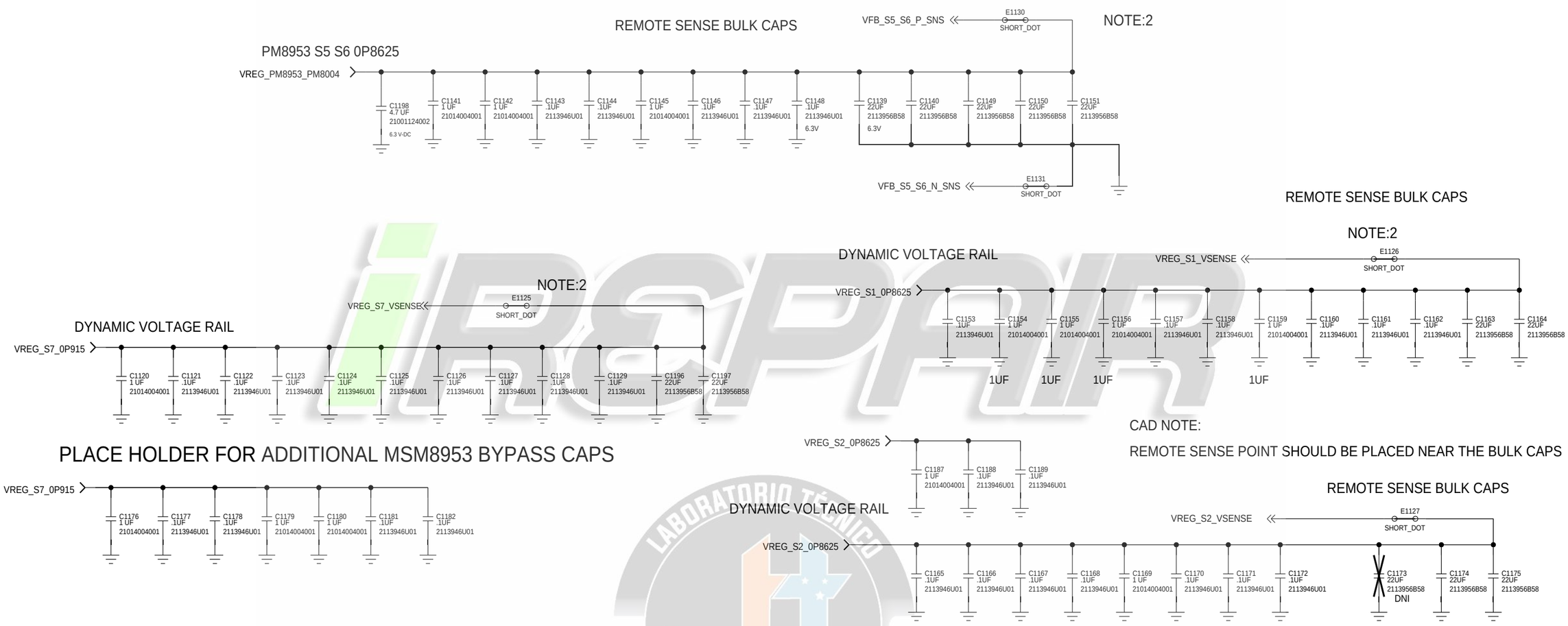

iRSPAIR
LABORATORIO TÉCNICO MICROSOLDADURA

APPROVALS	MOTOROLA MOBILE DEVICES
ENGINEER: ZHANG BEI	BLOCK TITLE: ap_pmic
LAST MODIFIED BY: ZHANG BEI Tue Sep 25 17:29:06 2018	
MOTOROLA CONFIDENTIAL RESTRICTED	B — PROJECT NAME: riom.cpm — REV: 01
	CAD FILE NAME: — PAGE 9 OF 63

THE DRAWING ON THIS PRINT AND INFORMATION THEREWITH ARE PROPRIETARY TO MOTOROLA AND SHALL NOT BE USED OR DISCUSSED IN WHOLE OR IN PART WITHOUT MOTOROLA'S CONSENT.
© COPYRIGHT, MOTOROLA. THIS DOES NOT IMPLY PUBLICATION

SDM: GROUND/DNC

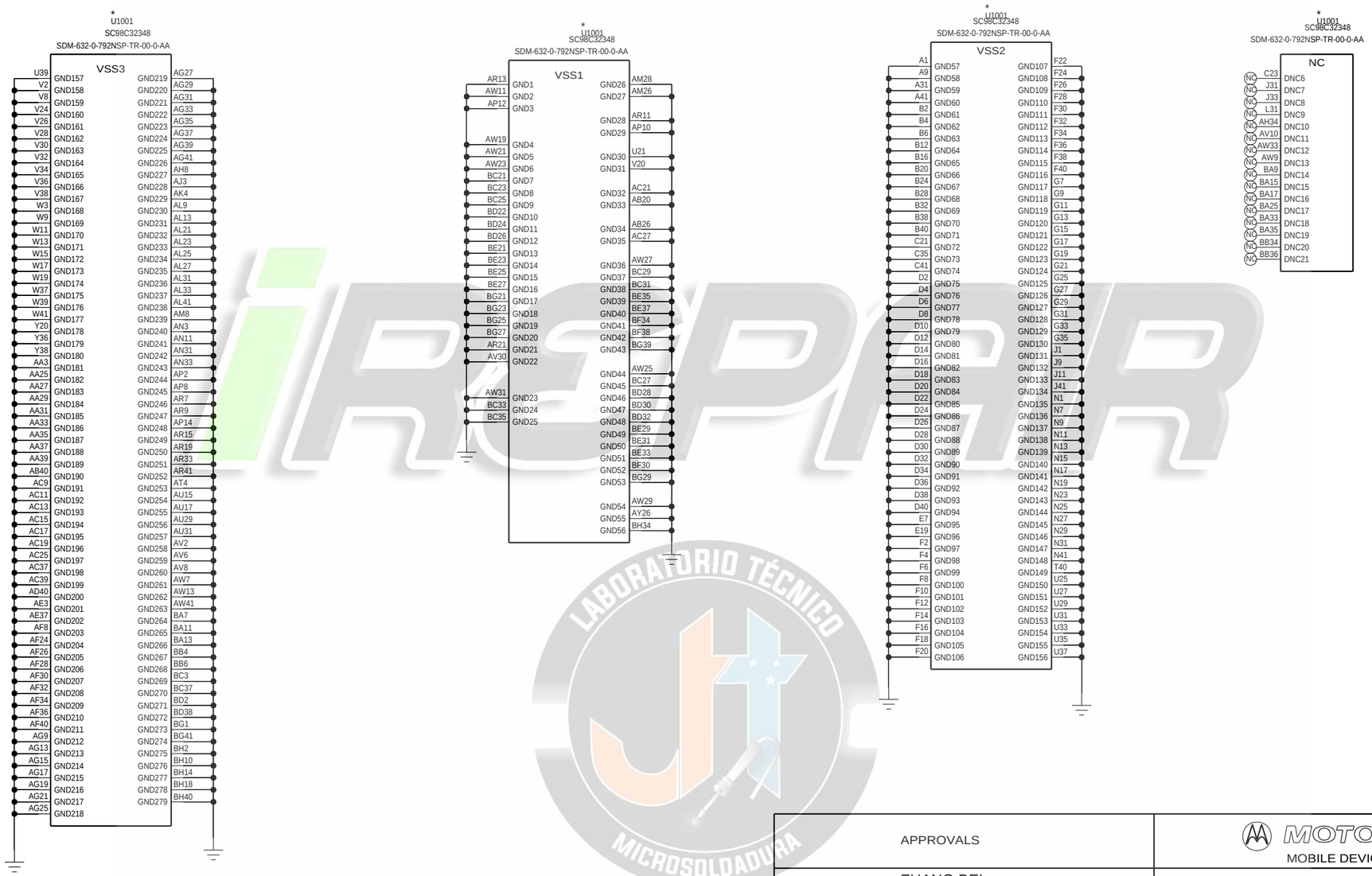

APPROVALS	MOTOROLA MOBILE DEVICES
ENGINEER: ZHANG BEI	BLOCK TITLE: ap_pmic
LAST MODIFIED BY: ZHANG BEI Tue Sep 25 17:29:07 2018	
MOTOROLA CONFIDENTIAL RESTRICTED THE DRAWING ON THIS PRINT AND INFORMATION THEREWITH ARE PROPRIETARY TO MOTOROLA AND SHALL NOT BE USED OR DISCUSSED IN WHOLE OR IN PART WITHOUT MOTOROLA'S CONSENT. © COPYRIGHT, MOTOROLA. THIS DOES NOT IMPLY PUBLICATION	B — PROJECT NAME: riom.cpm — REV: 01
	CAD FILE NAME: — PAGE 10 OF 63

iREPAIR LABORATORIO TÉCNICO MICROSOLDADURA

MEMORY: EMCP

REF: 1200-1239

EVB:32GB+3GB;LPDDR3

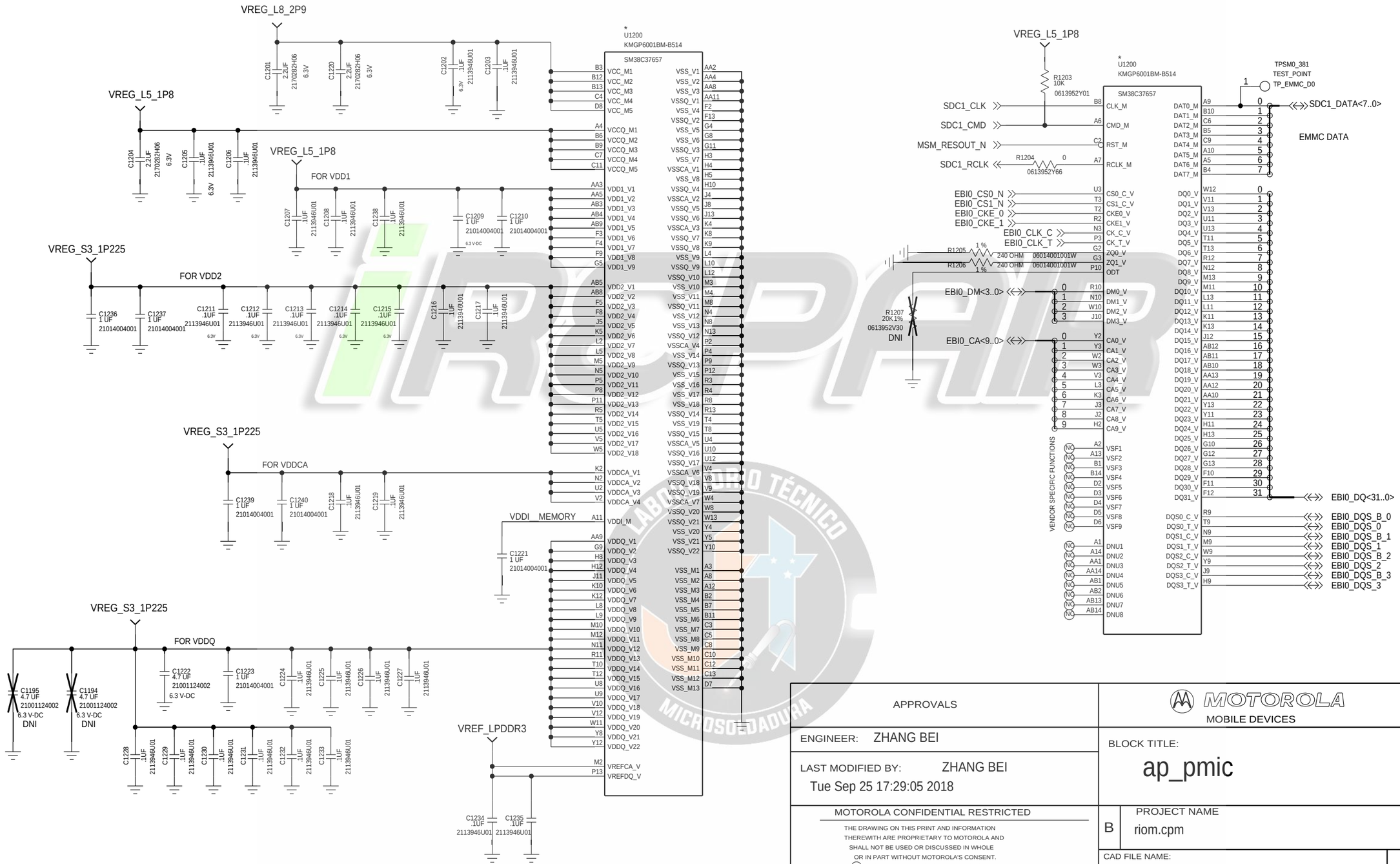

APPROVALS	MOTOROLA MOBILE DEVICES
ENGINEER: ZHANG BEI	BLOCK TITLE: ap_pmic
LAST MODIFIED BY: ZHANG BEI Tue Sep 25 17:29:05 2018	
MOTOROLA CONFIDENTIAL RESTRICTED	B — PROJECT NAME: riom.cpm — REV: 01
THE DRAWING ON THIS PRINT AND INFORMATION THEREWITH ARE PROPRIETARY TO MOTOROLA AND SHALL NOT BE USED OR DISCUSSED IN WHOLE OR IN PART WITHOUT MOTOROLA'S CONSENT. © COPYRIGHT, MOTOROLA. THIS DOES NOT IMPLY PUBLICATION	CAD FILE NAME: — PAGE 11 OF 63

iREPAIR LABORATORIO TÉCNICO MICROSOLDADURA

PM8953: HK/CHRG

REF: 1240-1259

VIA TO MAIN GND PLANE

CAD NOTE 2: CONNECT J3 (GND_RF) TO NEGATIVE TERMINAL OF VREG_RFCLK AND CONNECT TO THE MAIN GND USING DIRECT VIAS

CAD NOTE 3: CONNECT J2 (GND_XO) TO NEGATIVE TERMINAL OF VREG_XO AND CONNECT TO THE MAIN GND USING DIRECT VIAS

CAD NOTE 4: H3 MUST BE CONNECTED TO MAIN GND USING DEDICATED VIA

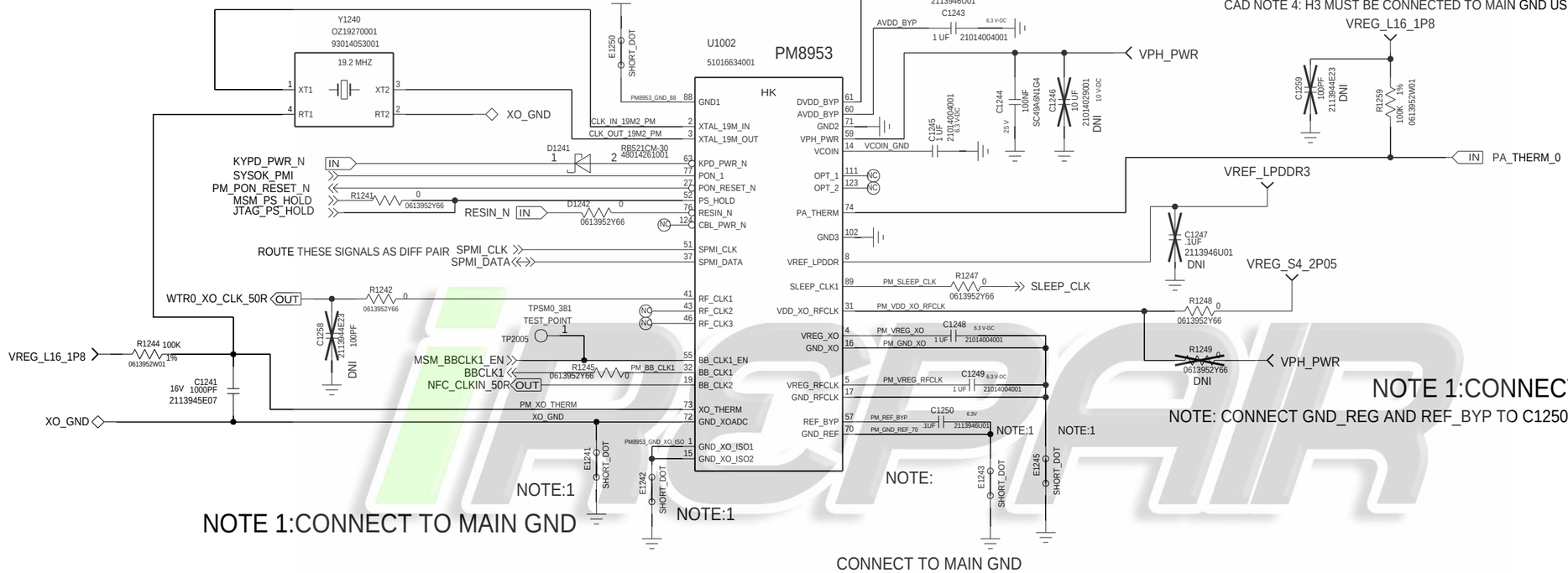

VIBRATOR DRIVER

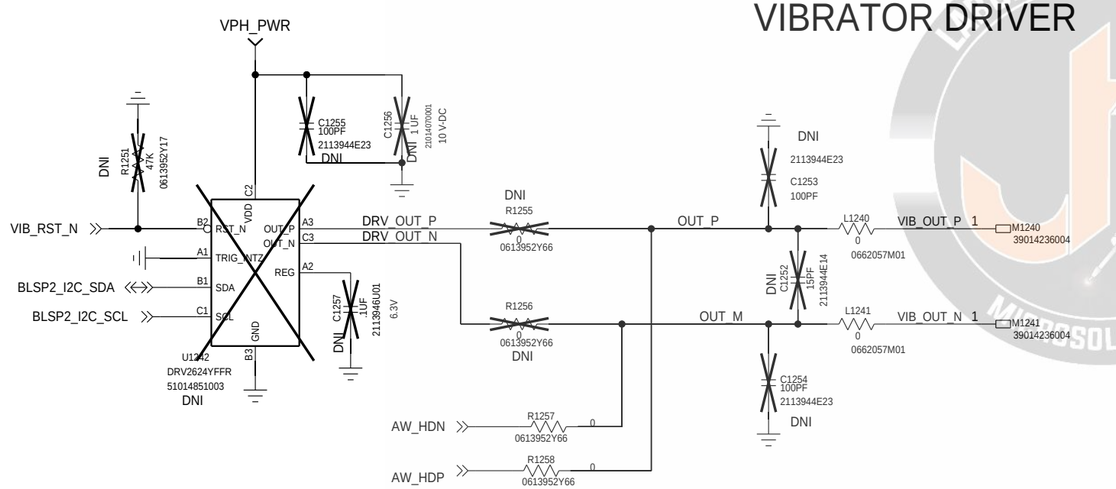

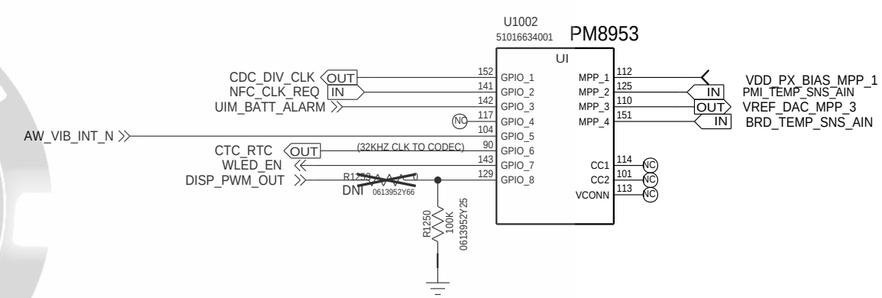

APPROVALS	MOTOROLA MOBILE DEVICES
ENGINEER: ZHANG JIA	BLOCK TITLE: ap_pmic
LAST MODIFIED BY: ZHANG JIA Tue Sep 25 17:29:04 2018	
MOTOROLA CONFIDENTIAL RESTRICTED	PROJECT NAME: B riom.cpm — REV: 01
THE DRAWING ON THIS PRINT AND INFORMATION THEREWITH ARE PROPRIETARY TO MOTOROLA AND SHALL NOT BE USED OR DISCUSSED IN WHOLE OR IN PART WITHOUT MOTOROLA'S CONSENT. © COPYRIGHT, MOTOROLA. THIS DOES NOT IMPLY PUBLICATION	CAD FILE NAME: — PAGE 12 OF 63

LABORATORIO TÉCNICO MICROSOLDADURA

PM8953: SMPS

REF: 1260-1279, 2340-2360

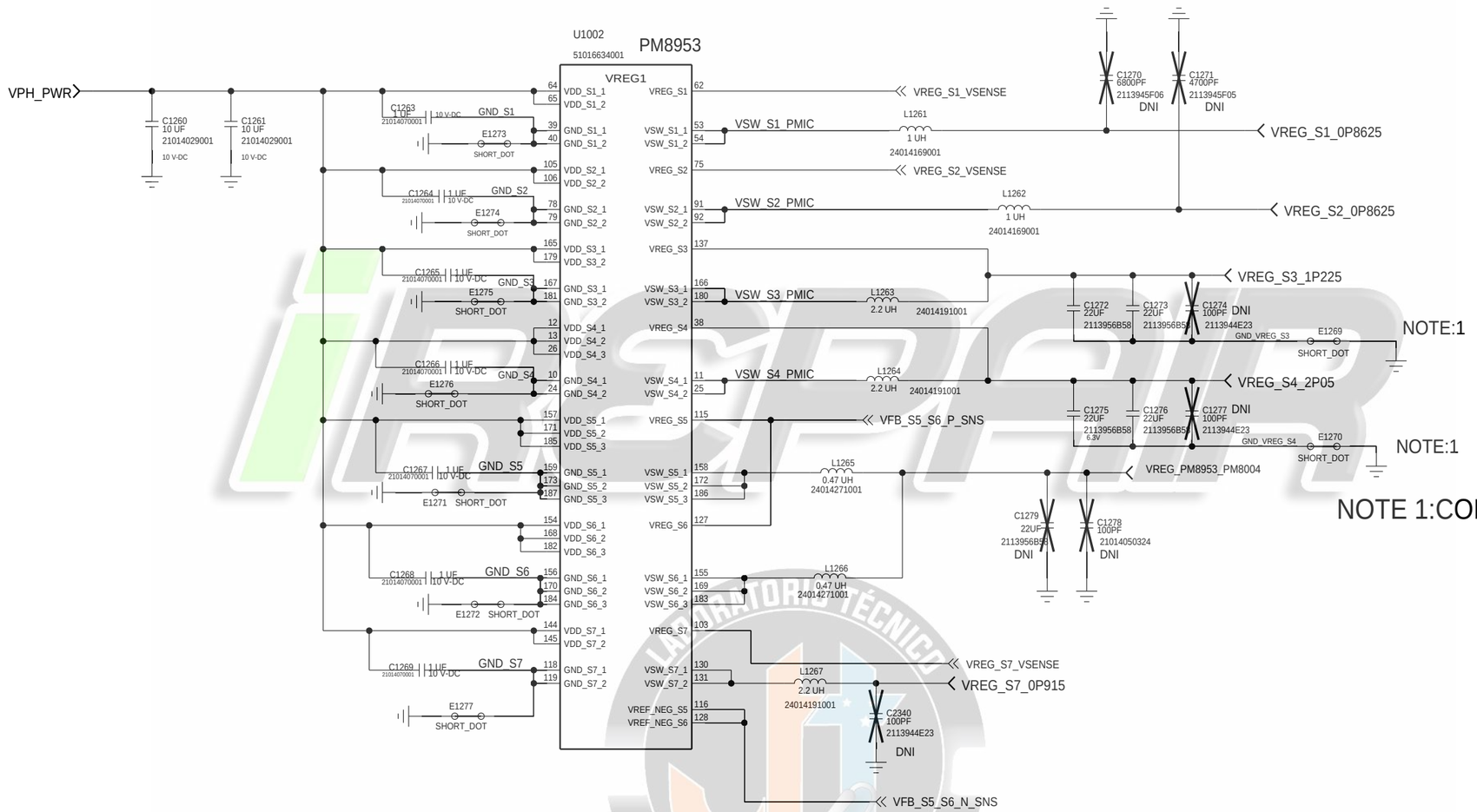

NOTE 1:CONNECT TO MAIN GND

NOTE: PLACE INPUT CAPS CLOSE TO RESPECTIVE VIN PINS
EACH CAP GND SHOULD BE STAR-ROUTED

APPROVALS	MOTOROLA MOBILE DEVICES	
ENGINEER: ZHANG JIA	BLOCK TITLE: ap_pmic	
LAST MODIFIED BY: ZHANG JIA Tue Sep 25 17:29:04 2018		
MOTOROLA CONFIDENTIAL RESTRICTED	B	PROJECT NAME riom.cpm	REV 01
THE DRAWING ON THIS PRINT AND INFORMATION THEREWITH ARE PROPRIETARY TO MOTOROLA AND SHALL NOT BE USED OR DISCUSSED IN WHOLE OR IN PART WITHOUT MOTOROLA'S CONSENT. © COPYRIGHT, MOTOROLA. THIS DOES NOT IMPLY PUBLICATION	CAD FILE NAME:	PAGE 13 OF 63

LABORATORIO TÉCNICO MICROSOLDADURA

PM8953: CODEC

REF: 2300-2339

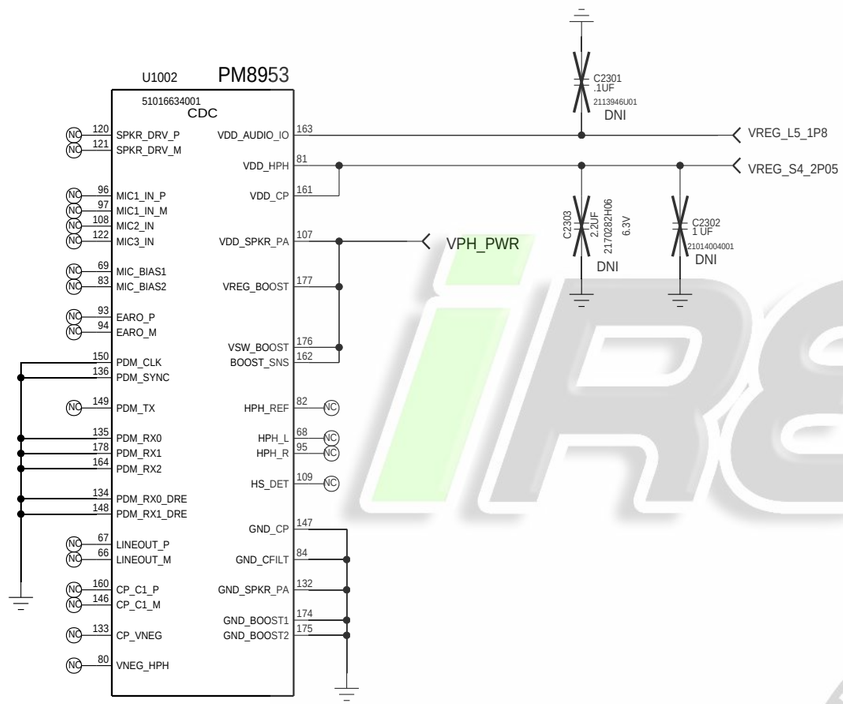

VIBRATOR DRIVER---(BACK UP)

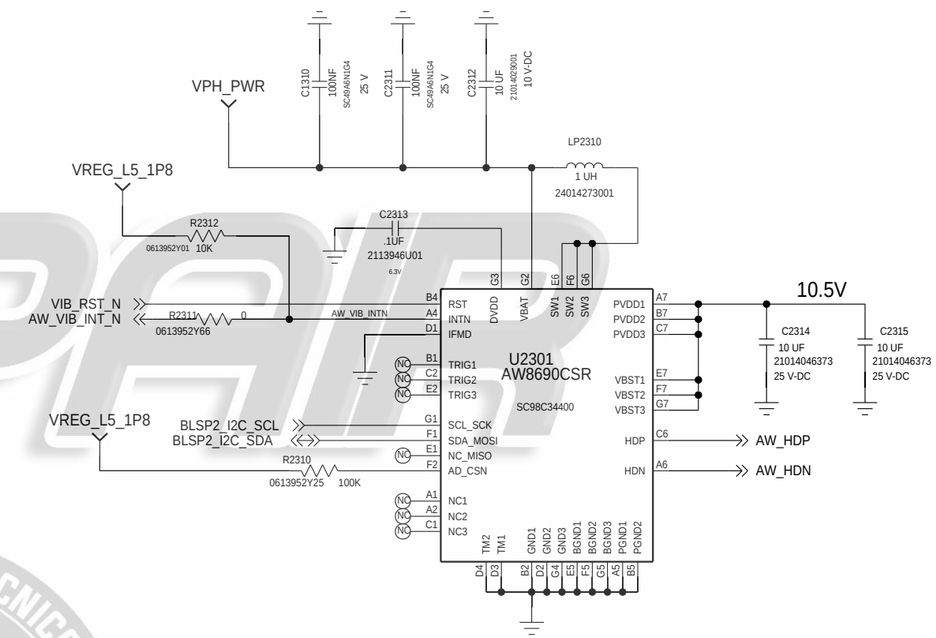

APPROVALS	MOTOROLA MOBILE DEVICES
ENGINEER: ZHANG JIA	BLOCK TITLE: ap_pmic
LAST MODIFIED BY: ZHANG JIA Tue Sep 25 17:29:06 2018	
MOTOROLA CONFIDENTIAL RESTRICTED	B — PROJECT NAME: riom.cpm — REV: 01
THE DRAWING ON THIS PRINT AND INFORMATION THEREWITH ARE PROPRIETARY TO MOTOROLA AND SHALL NOT BE USED OR DISCUSSED IN WHOLE OR IN PART WITHOUT MOTOROLA'S CONSENT. © COPYRIGHT, MOTOROLA. THIS DOES NOT IMPLY PUBLICATION	CAD FILE NAME:
	PAGE 14 OF 63

iREPAIR
LABORATORIO TÉCNICO MICROSOLDADURA

PM8953: VREGS

REF: 1280-1319

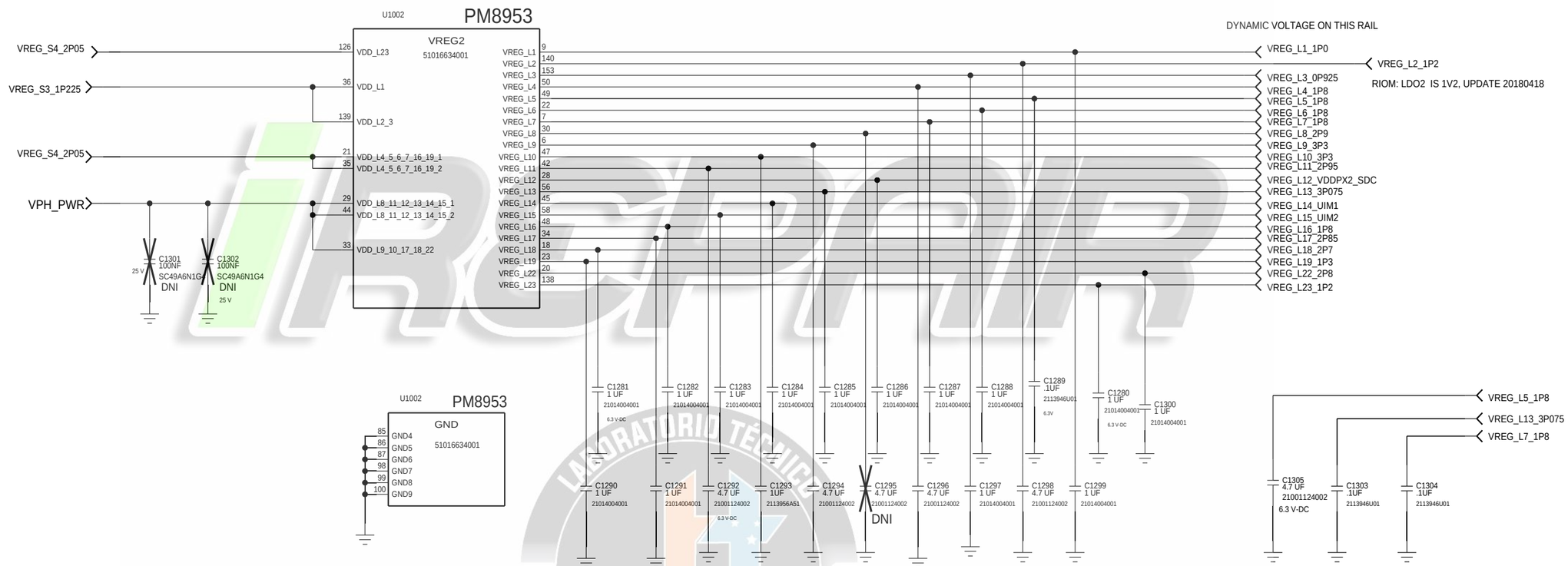

APPROVALS	MOTOROLA MOBILE DEVICES
ENGINEER: ZHANG JIA	BLOCK TITLE: ap_pmic
LAST MODIFIED BY: ZHANG JIA Tue Sep 25 17:29:08 2018	
MOTOROLA CONFIDENTIAL RESTRICTED	B — PROJECT NAME: riom.cpm — REV: 01
THE DRAWING ON THIS PRINT AND INFORMATION THEREWITH ARE PROPRIETARY TO MOTOROLA AND SHALL NOT BE USED OR DISCUSSED IN WHOLE OR IN PART WITHOUT MOTOROLA'S CONSENT. © COPYRIGHT, MOTOROLA. THIS DOES NOT IMPLY PUBLICATION	CAD FILE NAME:
	PAGE 15 OF 63

LABORATORIO TÉCNICO MICROSOLDADURA

PM8004

REF: 1400-1449

iREPAIR
LABORATORIO TÉCNICO MICROSOLDADURA

APPROVALS	MOTOROLA MOBILE DEVICES
ENGINEER: ZHANG BEI	BLOCK TITLE: ap_pmic
LAST MODIFIED BY: ZHANG BEI Sun Apr 08 22:46:27 2018	
MOTOROLA CONFIDENTIAL RESTRICTED	B — PROJECT NAME: riom.cpm — REV: 01
	CAD FILE NAME: — PAGE 16 OF 63

THE DRAWING ON THIS PRINT AND INFORMATION THEREWITH ARE PROPRIETARY TO MOTOROLA AND SHALL NOT BE USED OR DISCUSSED IN WHOLE OR IN PART WITHOUT MOTOROLA'S CONSENT.
© COPYRIGHT, MOTOROLA. THIS DOES NOT IMPLY PUBLICATION

TURE

SMB_1355

REF 1450-1499

iREPAIR
LABORATORIO TÉCNICO MICROSOLDADURA

APPROVALS	MOTOROLA MOBILE DEVICES
ENGINEER: ZHANGJIA	BLOCK TITLE: ap_pmic
LAST MODIFIED BY: ZHANGJIA Sat Mar 31 11:58:04 2018	
MOTOROLA CONFIDENTIAL RESTRICTED	B PROJECT NAME riom.cpm — REV 01
	CAD FILE NAME: — PAGE 17 OF 63

THE DRAWING ON THIS PRINT AND INFORMATION THEREWITH ARE PROPRIETARY TO MOTOROLA AND SHALL NOT BE USED OR DISCUSSED IN WHOLE OR IN PART WITHOUT MOTOROLA'S CONSENT.
© COPYRIGHT, MOTOROLA. THIS DOES NOT IMPLY PUBLICATION

PMI632: CHARGING

REF: 1320-1339

CHANGE TO PMI632-9
PMI632-9 SUPPORT TYPE-C;QC;PARALLEL CHARGING.

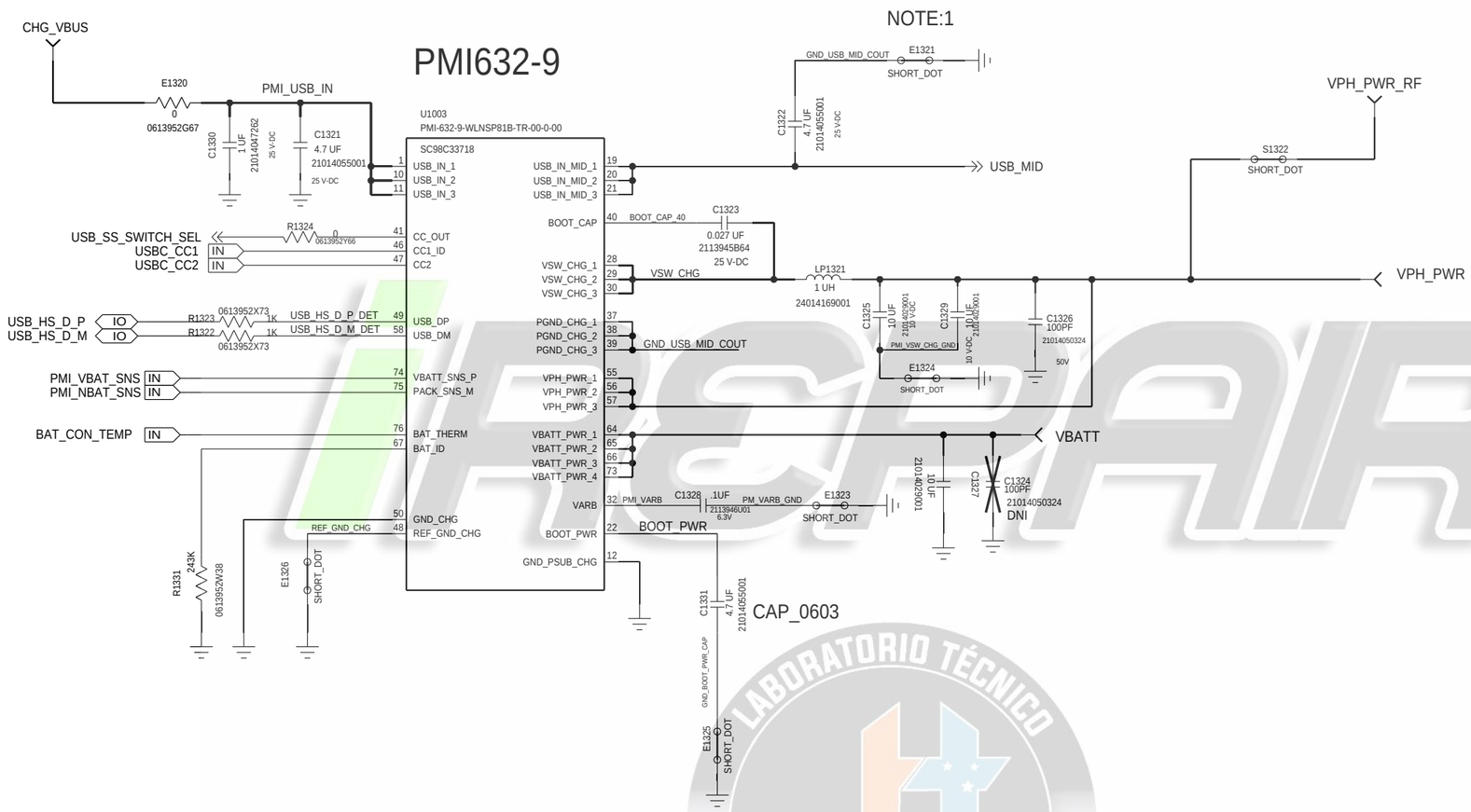

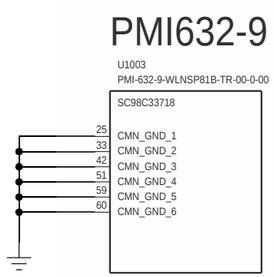

APPROVALS	MOTOROLA MOBILE DEVICES
ENGINEER: ZHANG JIA	BLOCK TITLE: ap_pmic
LAST MODIFIED BY: ZHANG JIA Tue Sep 25 17:29:05 2018	
MOTOROLA CONFIDENTIAL RESTRICTED	B — PROJECT NAME: riom.cpm — REV: 01
THE DRAWING ON THIS PRINT AND INFORMATION THEREWITH ARE PROPRIETARY TO MOTOROLA AND SHALL NOT BE USED OR DISCUSSED IN WHOLE OR IN PART WITHOUT MOTOROLA'S CONSENT. © COPYRIGHT, MOTOROLA. THIS DOES NOT IMPLY PUBLICATION	CAD FILE NAME: — PAGE 18 OF 63

LABORATORIO TÉCNICO MICROSOLDADURA

PMI632: IO&REF

REF: 1340-1349

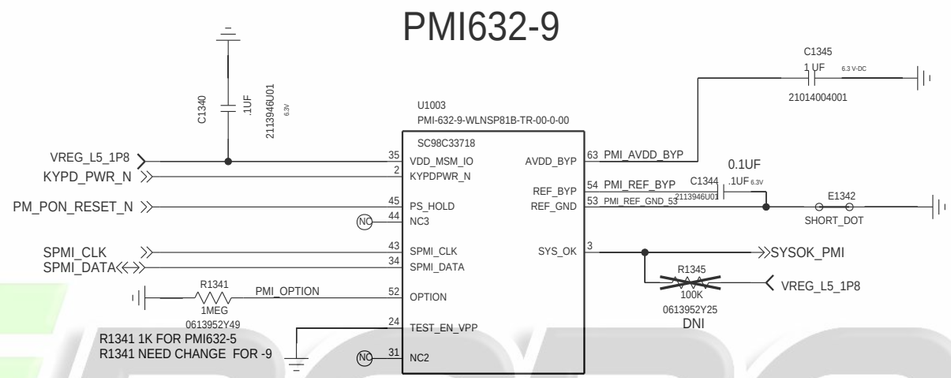

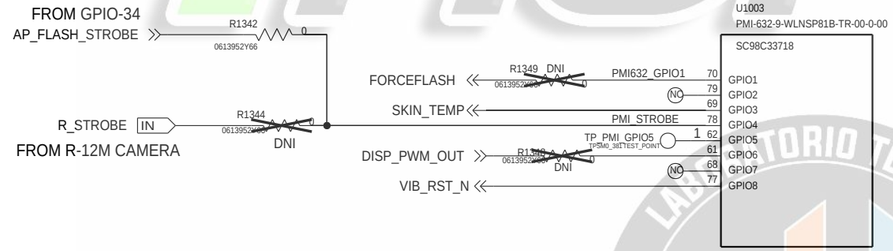

FOR SDM THERMAL

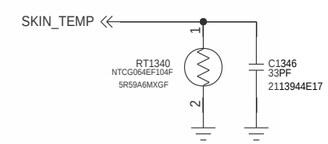

APPROVALS	MOTOROLA MOBILE DEVICES
ENGINEER: ZHANG BEI	BLOCK TITLE: ap_pmic
LAST MODIFIED BY: ZHANG BEI Tue Sep 25 17:29:04 2018	
MOTOROLA CONFIDENTIAL RESTRICTED	B — PROJECT NAME: riom.cpm — REV: 01
THE DRAWING ON THIS PRINT AND INFORMATION THEREWITH ARE PROPRIETARY TO MOTOROLA AND SHALL NOT BE USED OR DISCUSSED IN WHOLE OR IN PART WITHOUT MOTOROLA'S CONSENT. © COPYRIGHT, MOTOROLA. THIS DOES NOT IMPLY PUBLICATION	CAD FILE NAME: — PAGE 19 OF 63

iREPAIR LABORATORIO TÉCNICO MICROSOLDADURA

PMI632: REG_WLED

REF: 1350-1369

PMI632-9

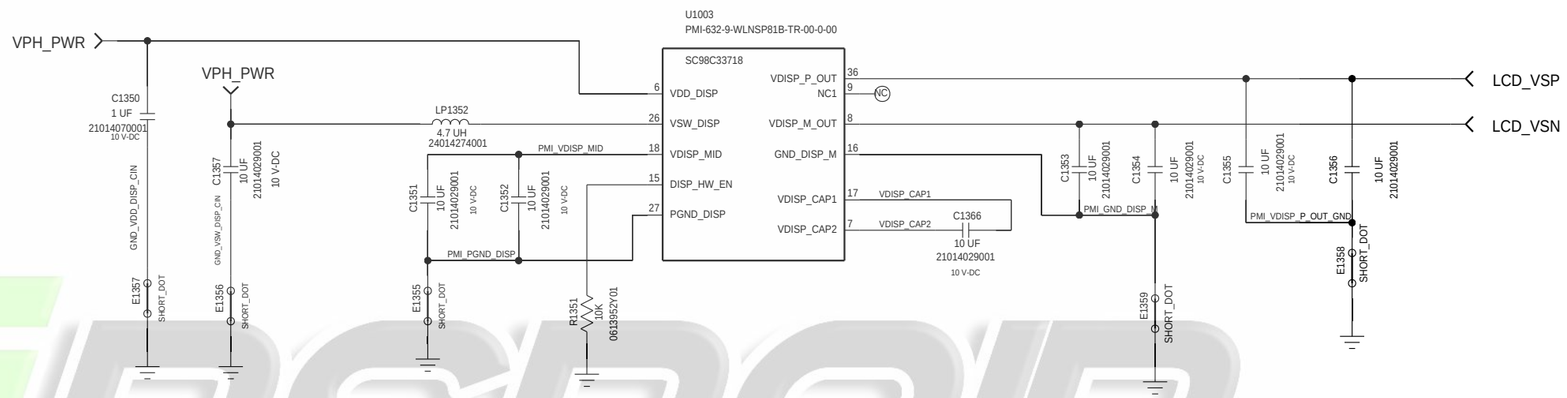

PMI632-9

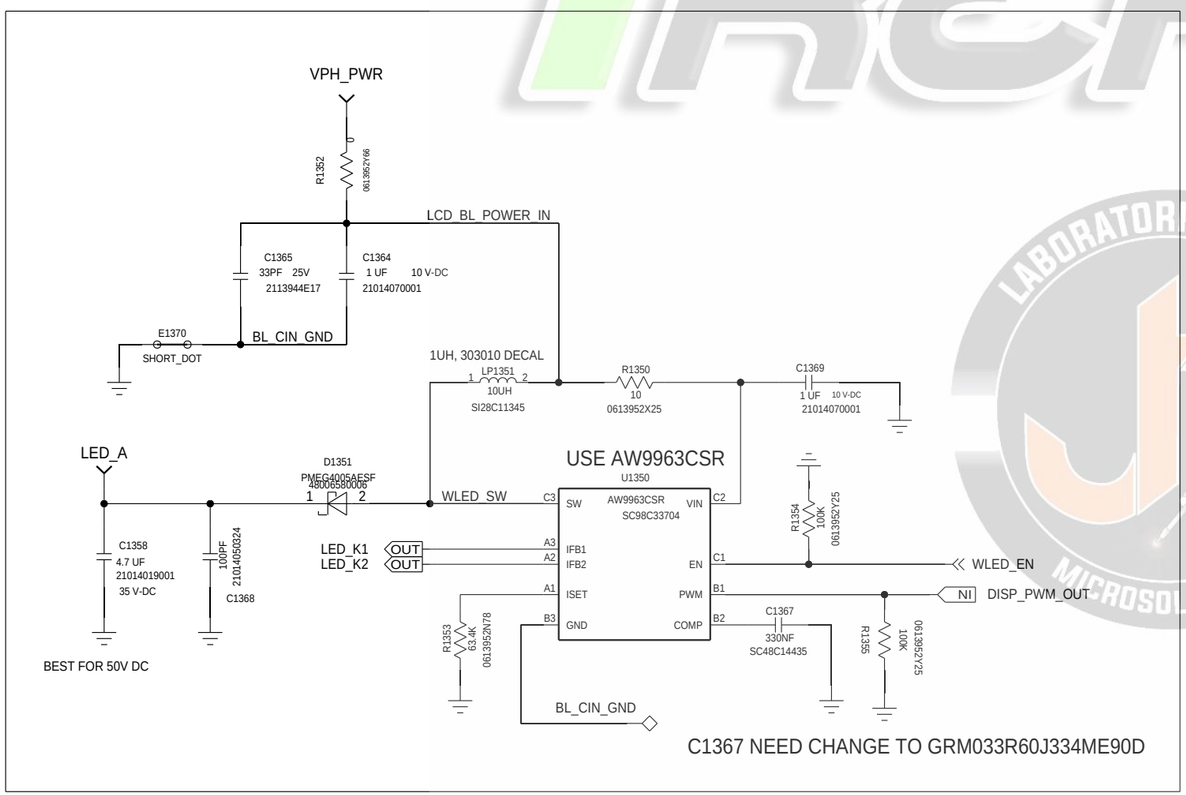

C1367 NEED CHANGE TO GRM033R60J334ME90D

PMI632-9

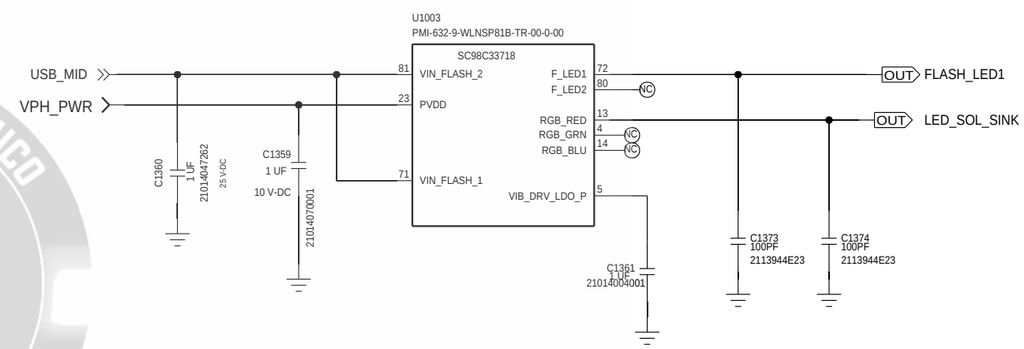

APPROVALS	MOTOROLA MOBILE DEVICES	
ENGINEER: ZHANG BEI	BLOCK TITLE: ap_pmic	
LAST MODIFIED BY: ZHANG BEI Tue Sep 25 17:29:05 2018		
MOTOROLA CONFIDENTIAL RESTRICTED	PROJECT NAME: riom.cpm	REV: 01
	CAD FILE NAME:	PAGE 20 OF 63

THE DRAWING ON THIS PRINT AND INFORMATION THEREWITH ARE PROPRIETARY TO MOTOROLA AND SHALL NOT BE USED OR DISCUSSED IN WHOLE OR IN PART WITHOUT MOTOROLA'S CONSENT.
© COPYRIGHT, MOTOROLA. THIS DOES NOT IMPLY PUBLICATION

iREPAIR
LABORATORIO TÉCNICO MICROSOLDADURA

PWR: USB-C

REF:5000 - 5219

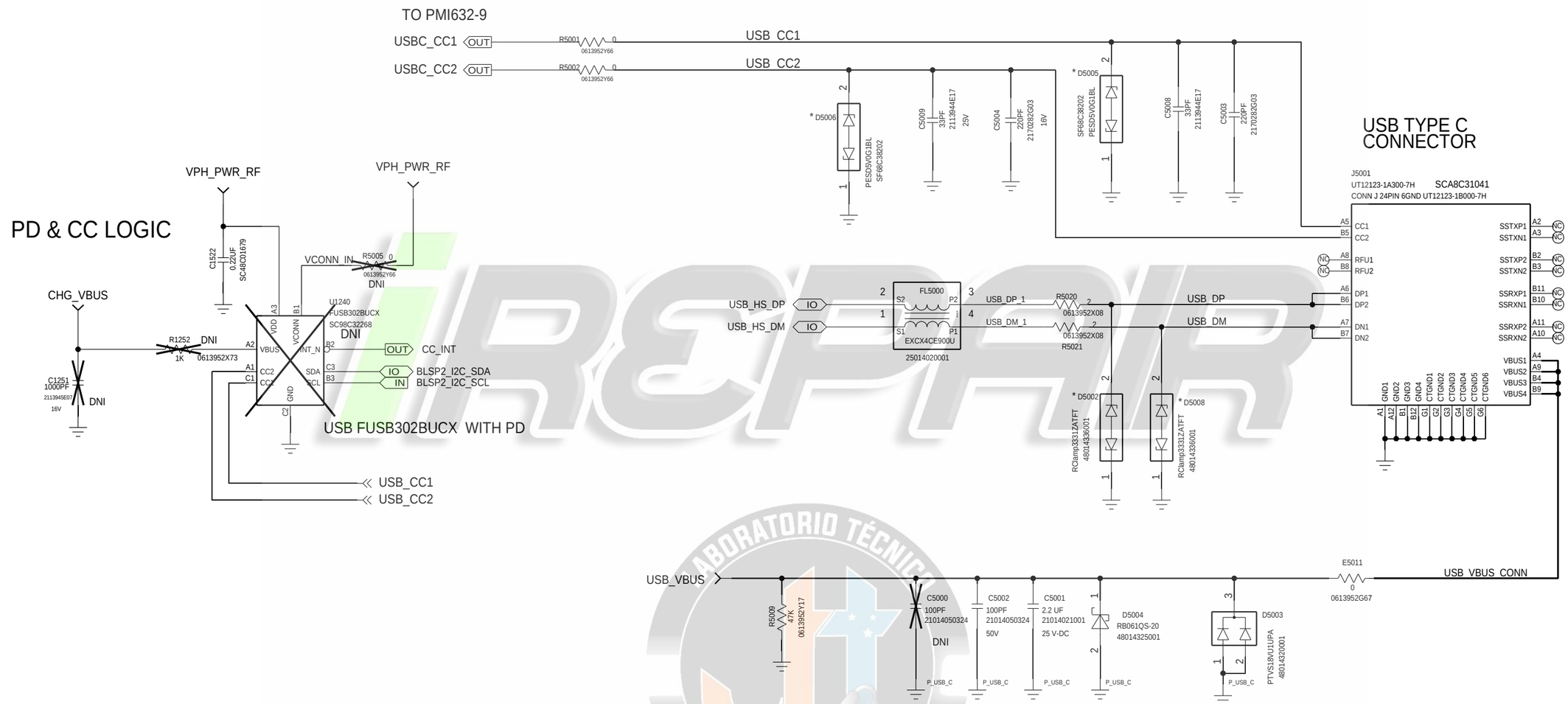

APPROVALS	MOTOROLA MOBILE DEVICES
ENGINEER: ZHANG BEI	BLOCK TITLE: power
LAST MODIFIED BY: ZHANG BEI Tue Sep 25 17:29:14 2018	
MOTOROLA CONFIDENTIAL RESTRICTED THE DRAWING ON THIS PRINT AND INFORMATION THEREWITH ARE PROPRIETARY TO MOTOROLA AND SHALL NOT BE USED OR DISCUSSED IN WHOLE OR IN PART WITHOUT MOTOROLA'S CONSENT. © COPYRIGHT, MOTOROLA. THIS DOES NOT IMPLY PUBLICATION	B — PROJECT NAME: riom.cpm — REV: 01
	CAD FILE NAME: — PAGE 21 OF 63

LABORATORIO TÉCNICO MICROSOLDADURA

PWR: BATT

REF:510 - 550

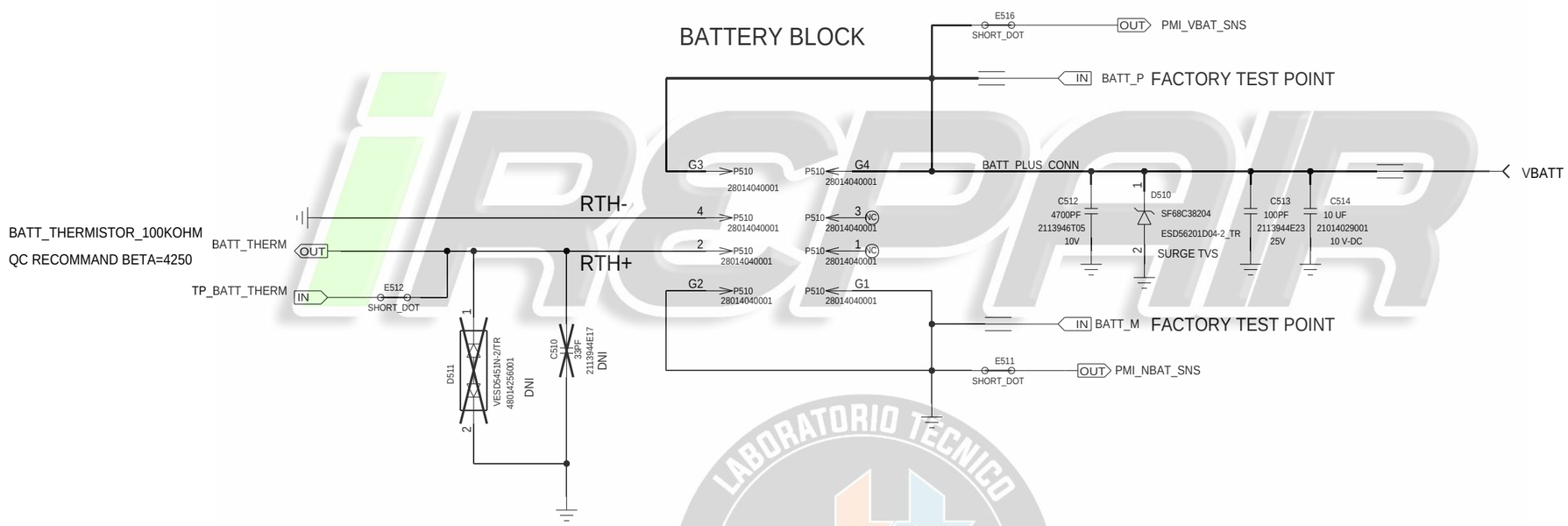

APPROVALS	MOTOROLA MOBILE DEVICES
ENGINEER: ZHANG BEI	BLOCK TITLE: power
LAST MODIFIED BY: ZHANG BEI Tue Sep 25 17:29:15 2018	
MOTOROLA CONFIDENTIAL RESTRICTED THE DRAWING ON THIS PRINT AND INFORMATION THEREWITH ARE PROPRIETARY TO MOTOROLA AND SHALL NOT BE USED OR DISCUSSED IN WHOLE OR IN PART WITHOUT MOTOROLA'S CONSENT. © COPYRIGHT, MOTOROLA. THIS DOES NOT IMPLY PUBLICATION	B PROJECT NAME riom.cpm — REV 01
	CAD FILE NAME: — PAGE 22 OF 63

iREPAIR
LABORATORIO TECNICO MICROSOLDADURA

PWR: OVP

REF:800 - 899

USB_SNS	DC_SNS	POWER SOURCE
0	0	USB CHARGER
0	1	NA MAYBE OVP
1	0	WIRELESS CHARGER
1	1	NO CHARGER

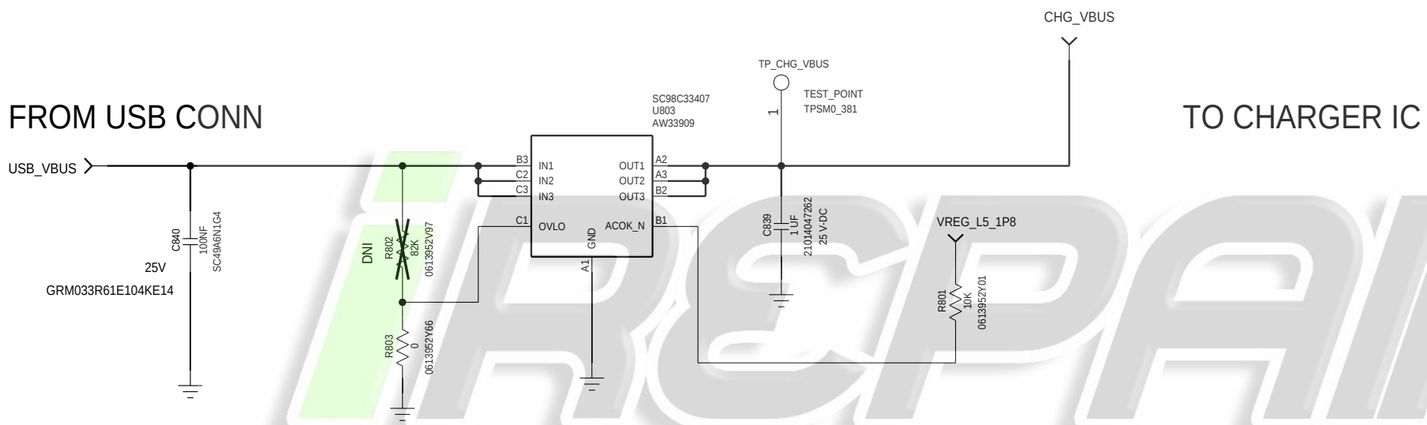

LABORATORIO TÉCNICO MICROSOLDADURA

APPROVALS	MOTOROLA MOBILE DEVICES
ENGINEER: CHUNLEI YOU	BLOCK TITLE: power
LAST MODIFIED BY: Tue Sep 25 17:29:15 2018	
MOTOROLA CONFIDENTIAL RESTRICTED	B — PROJECT NAME: riom.cpm — REV: 01
THE DRAWING ON THIS PRINT AND INFORMATION THEREWITH ARE PROPRIETARY TO MOTOROLA AND SHALL NOT BE USED OR DISCUSSED IN WHOLE OR IN PART WITHOUT MOTOROLA'S CONSENT.	CAD FILE NAME:
© COPYRIGHT, MOTOROLA. THIS DOES NOT IMPLY PUBLICATION	PAGE 23 OF 63

WIRELESS CHARGER

REF:800 - 899

iREPAIR
LABORATORIO TÉCNICO MICROSOLDADURA

APPROVALS	MOTOROLA MOBILE DEVICES
ENGINEER: CHUNLEI YOU	BLOCK TITLE: power
LAST MODIFIED BY: Thu Mar 22 14:12:50 2018	
MOTOROLA CONFIDENTIAL RESTRICTED	B — PROJECT NAME: riom.cpm — REV: 01
	CAD FILE NAME: — PAGE 24 OF 63

THE DRAWING ON THIS PRINT AND INFORMATION THEREWITH ARE PROPRIETARY TO MOTOROLA AND SHALL NOT BE USED OR DISCUSSED IN WHOLE OR IN PART WITHOUT MOTOROLA'S CONSENT.
© COPYRIGHT, MOTOROLA. THIS DOES NOT IMPLY PUBLICATION

CAM: POWER REF:5500-5529

AVDD 2.8V FOR REAR MAIN

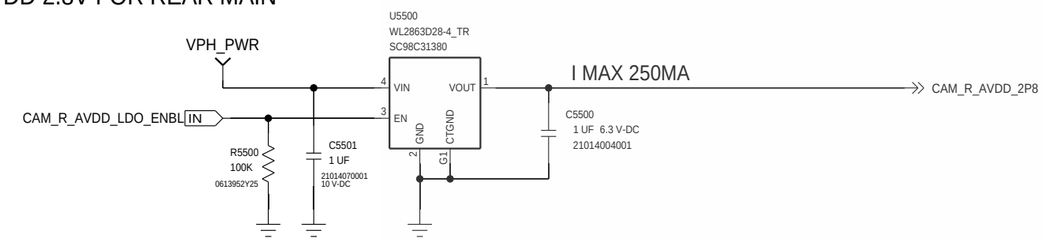

AVDD 2.8V FOR AUX AND FRONT

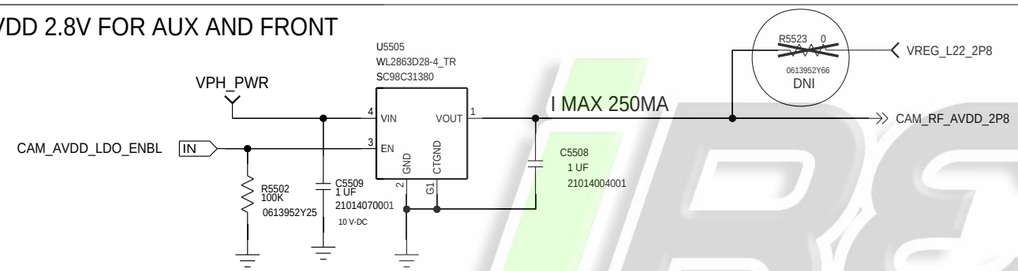

R_CAM_DIGITAL REGULATOR 1.2V (RIO-M)

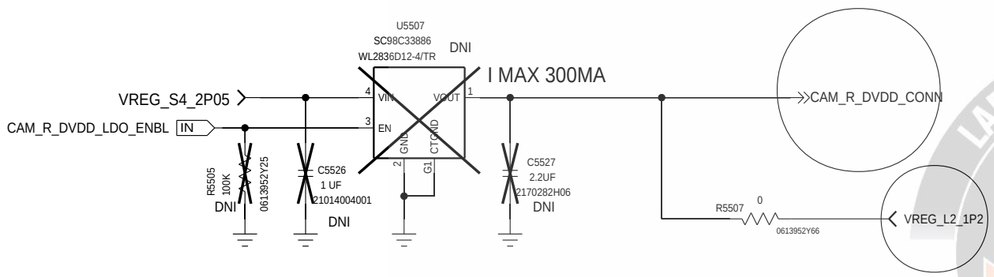

AUX_CAMERA CORE - 1.2V

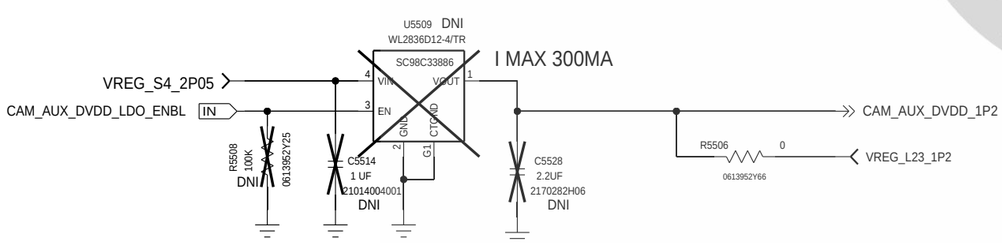

REAR FACING FLASH

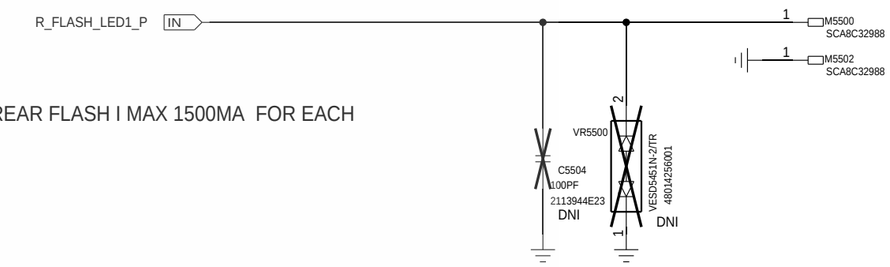

F_CAMERA CORE - 1.2V

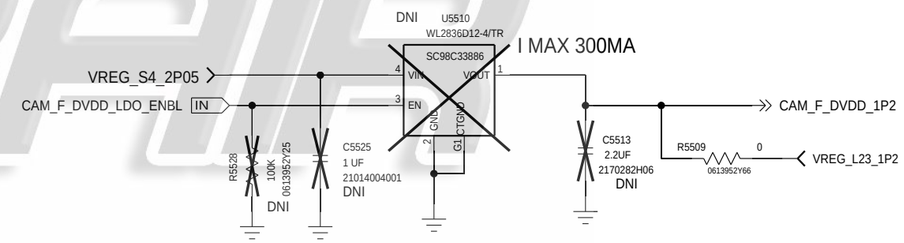

APPROVALS	MOTOROLA MOBILE DEVICES	
ENGINEER: ZHANG BEI	BLOCK TITLE: multimedia	
LAST MODIFIED BY: ZHANG BEI Tue Sep 25 17:29:13 2018		
MOTOROLA CONFIDENTIAL RESTRICTED	B PROJECT NAME riom.cpm	REV 01
THE DRAWING ON THIS PRINT AND INFORMATION THEREWITH ARE PROPRIETARY TO MOTOROLA AND SHALL NOT BE USED OR DISCUSSED IN WHOLE OR IN PART WITHOUT MOTOROLA'S CONSENT. © COPYRIGHT, MOTOROLA. THIS DOES NOT IMPLY PUBLICATION	CAD FILE NAME:	PAGE 25 OF 63

LABORATORIO TÉCNICO MICROSOLDADURA

CAM: FRONT CONNECTOR

REF 5550-5569

NEED TO CONFIRM THE PIN DIFINE

FF CAMERA CONNECTOR

12M CAM I2C ADDR: 0X??(W), 0X??(R)

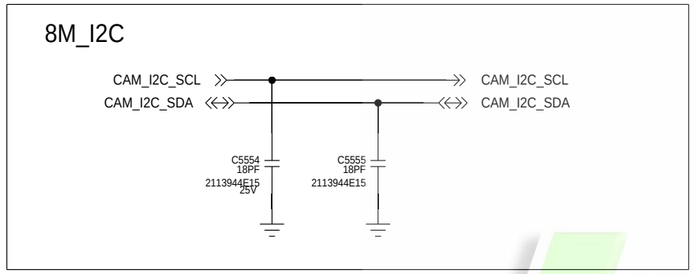

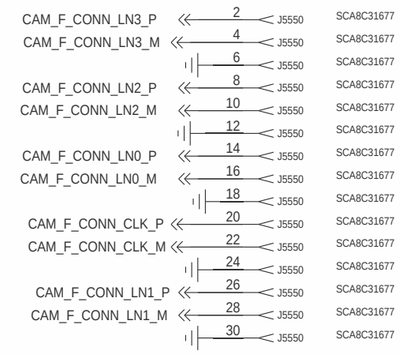

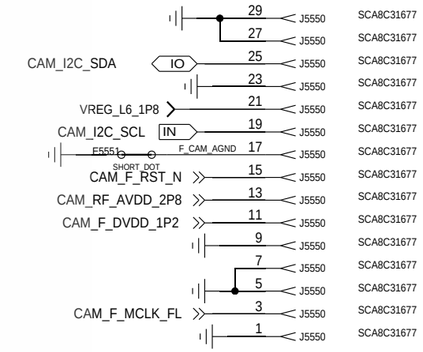

CAPACIORS BEADS ON THIS PAGE NEED BE PLACED CLOSE TO FRONT CAMERA CONNECTOR PIN.

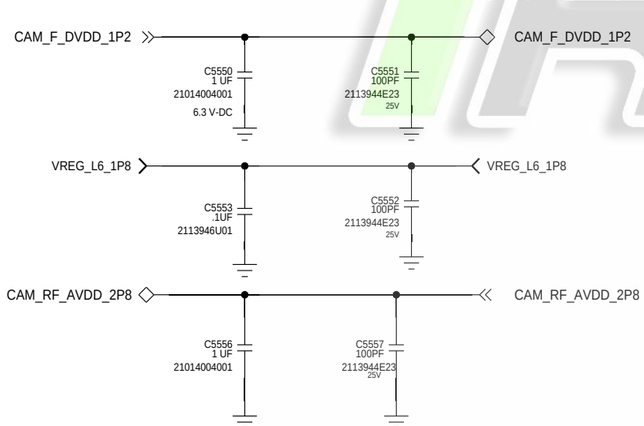

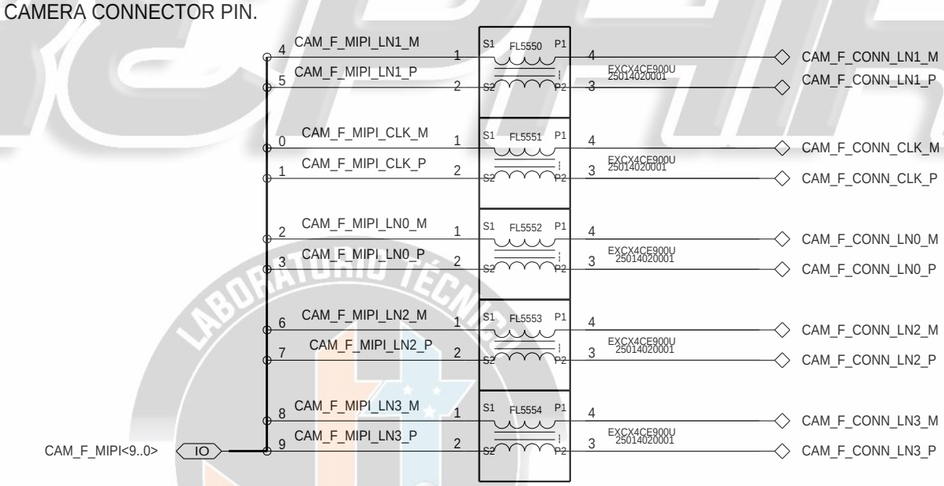

EMI/ESD FILTER

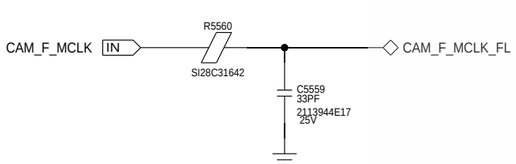

XSHUTDOWN

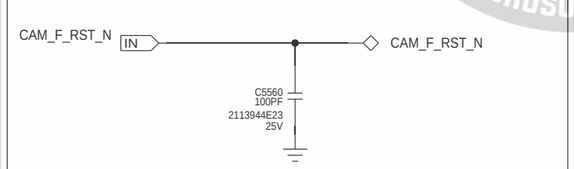

APPROVALS	MOTOROLA MOBILE DEVICES
ENGINEER: ZHANG BEI	BLOCK TITLE: multimedia
LAST MODIFIED BY: ZHANG BEI Tue Sep 25 17:29:12 2018	
MOTOROLA CONFIDENTIAL RESTRICTED	B — PROJECT NAME: riom.cpm — REV: 01
THE DRAWING ON THIS PRINT AND INFORMATION THEREWITH ARE PROPRIETARY TO MOTOROLA AND SHALL NOT BE USED OR DISCUSSED IN WHOLE OR IN PART WITHOUT MOTOROLA'S CONSENT. © COPYRIGHT, MOTOROLA. THIS DOES NOT IMPLY PUBLICATION	CAD FILE NAME: — PAGE 26 OF 63

iREPAIR LABORATORIO TECNICO MICROSOLDADURA

cam: rear main connector

REF:5570-5589

CAM I2C ADDR: 0X34(W), 0X35(R) FOR IMX362
CAM I2C ADDR: 0X5A(W), 0X5B(R) FOR 2L7

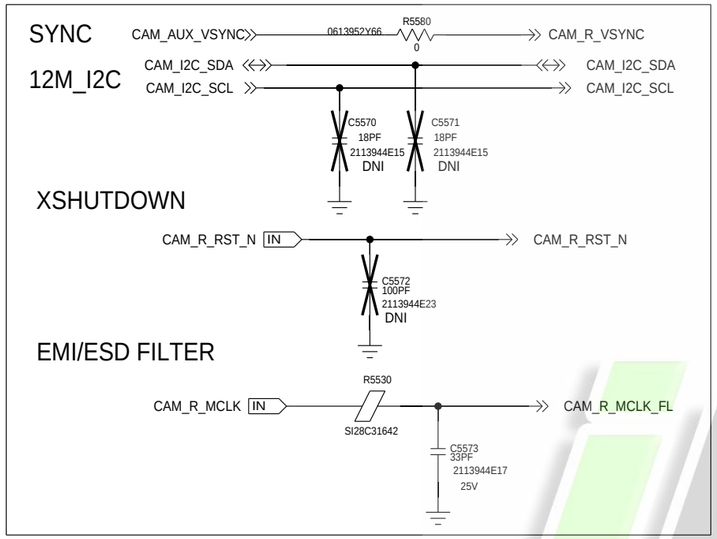

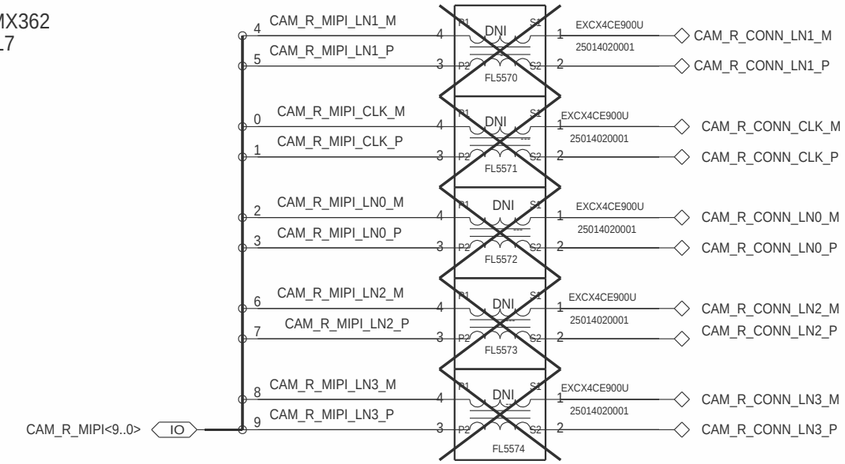

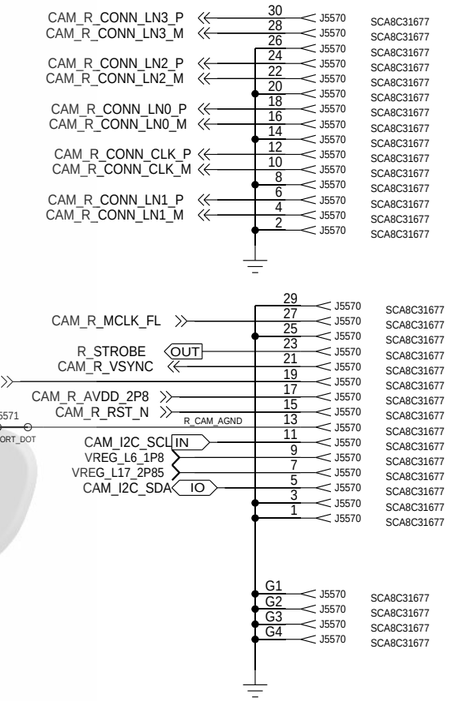

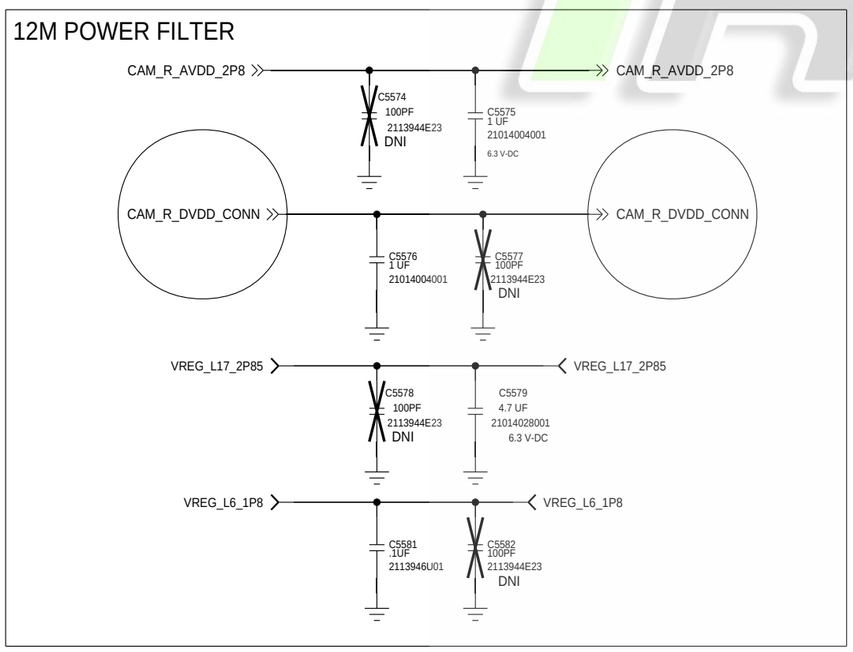

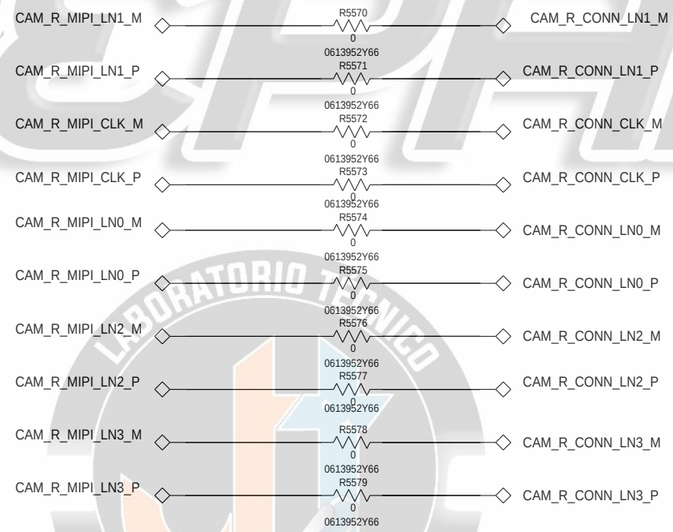

CAPACIORS BEADS ON THIS PAGE NEED BE PLACED CLOSE TO MAIN REAR CAMERA CONNECTOR PIN.

APPROVALS	MOTOROLA MOBILE DEVICES	
ENGINEER: ZHANG BEI	BLOCK TITLE: multimedia	
LAST MODIFIED BY: ZHANG BEI Tue Sep 25 17:29:12 2018		
MOTOROLA CONFIDENTIAL RESTRICTED	PROJECT NAME: riom.cpm	REV: 01
	CAD FILE NAME:	PAGE 27 OF 63

THE DRAWING ON THIS PRINT AND INFORMATION THEREWITH ARE PROPRIETARY TO MOTOROLA AND SHALL NOT BE USED OR DISCUSSED IN WHOLE OR IN PART WITHOUT MOTOROLA'S CONSENT.
© COPYRIGHT, MOTOROLA. THIS DOES NOT IMPLY PUBLICATION

CAM: REAR AUX CONNECTOR

CAPACIORS BEADS ON THIS PAGE NEED BE PLACED CLOSE TO AUX REAR CAMERA CONNECTOR PIN.

REF:5590-5610 5M CAM I2C ADDR: 0X??(W), 0X??(R)

AUX_I2C

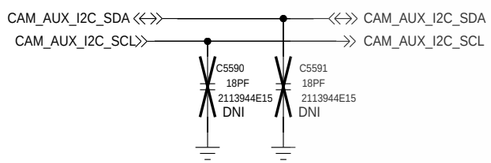

XSHUTDOWN

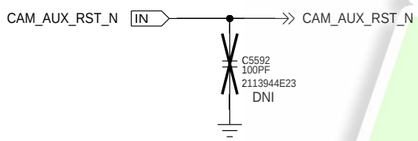

EMI/ESD FILTER

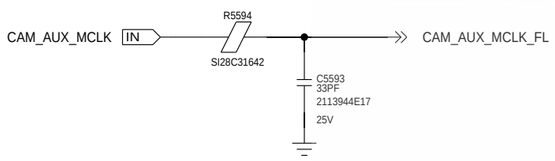

NEED TO CHECK MCLK

AUX POWER FILTER

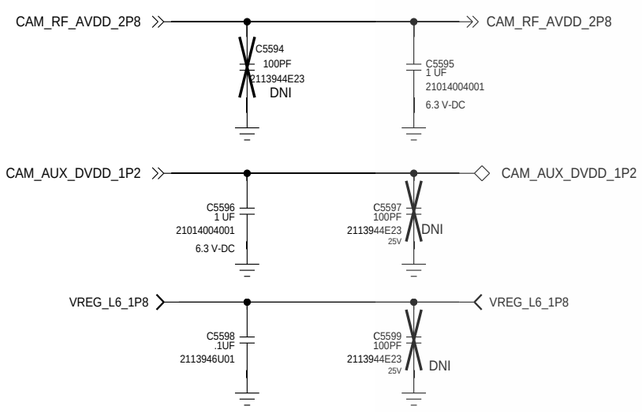

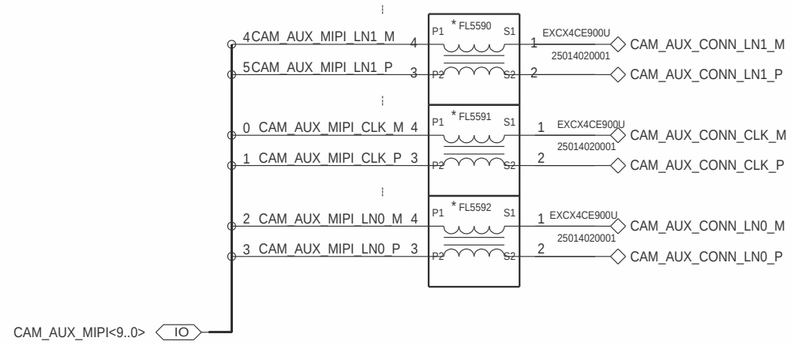

SCA8C31682 IS AXQ CONN

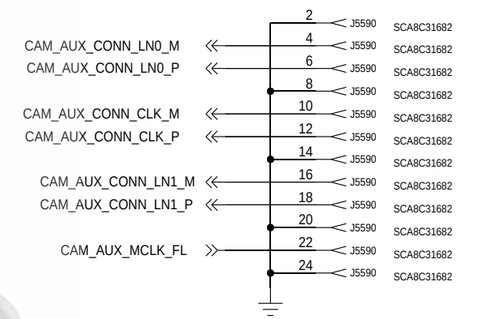

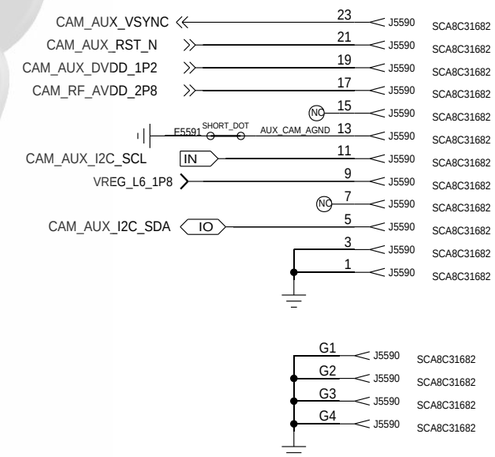

iREPAIR
LABORATORIO TÉCNICO MICROSOLDADURA

APPROVALS	MOTOROLA MOBILE DEVICES
ENGINEER: ZHANG BEI	BLOCK TITLE: multimedia
LAST MODIFIED BY: ZHANG BEI Tue Sep 25 17:29:12 2018	
MOTOROLA CONFIDENTIAL RESTRICTED	B — PROJECT NAME: riom.cpm — REV: 01
THE DRAWING ON THIS PRINT AND INFORMATION THEREWITH ARE PROPRIETARY TO MOTOROLA AND SHALL NOT BE USED OR DISCUSSED IN WHOLE OR IN PART WITHOUT MOTOROLA'S CONSENT.	CAD FILE NAME:
© COPYRIGHT, MOTOROLA. THIS DOES NOT IMPLY PUBLICATION	PAGE 28 OF 63

CAM: REAR FLASH

FLASH LED

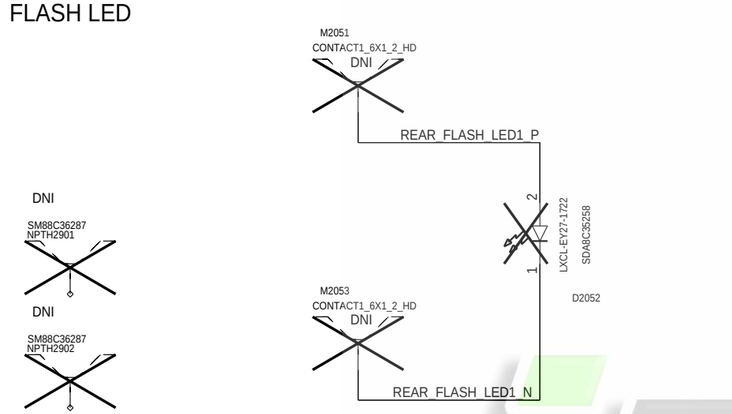

FLASH LED--- DNI-03

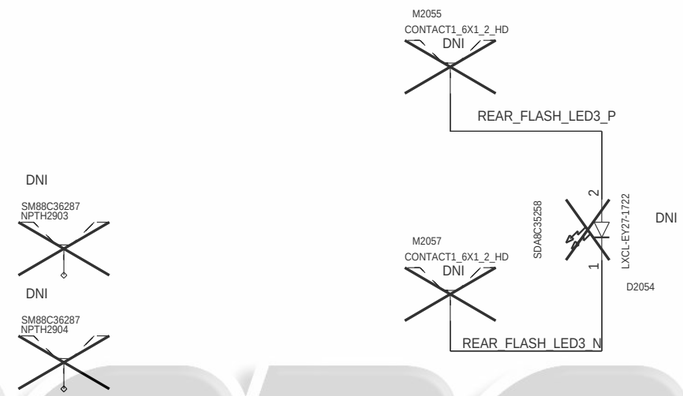

FLASH LED--- DNI-02

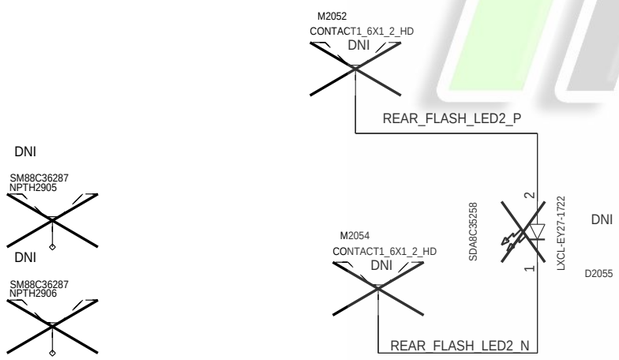

FLASH LED--- DNI-04

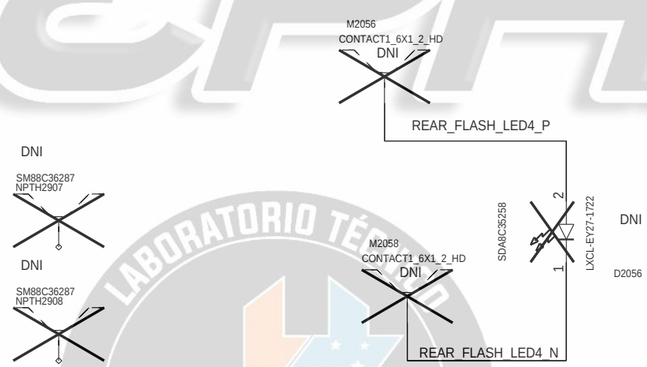

iREPAIR
LABORATORIO TÉCNICO MICROSOLDADURA

APPROVALS	MOTOROLA MOBILE DEVICES
ENGINEER: ZHANG BEI	BLOCK TITLE: multimedia
LAST MODIFIED BY: ZHANG BEI Tue Sep 25 17:29:13 2018	
MOTOROLA CONFIDENTIAL RESTRICTED	B — PROJECT NAME: riom.cpm — REV: 01
THE DRAWING ON THIS PRINT AND INFORMATION THEREWITH ARE PROPRIETARY TO MOTOROLA AND SHALL NOT BE USED OR DISCUSSED IN WHOLE OR IN PART WITHOUT MOTOROLA'S CONSENT. © COPYRIGHT, MOTOROLA. THIS DOES NOT IMPLY PUBLICATION	CAD FILE NAME: — PAGE 29 OF 63

DISP: CONNECTOR

REF:5620--5650

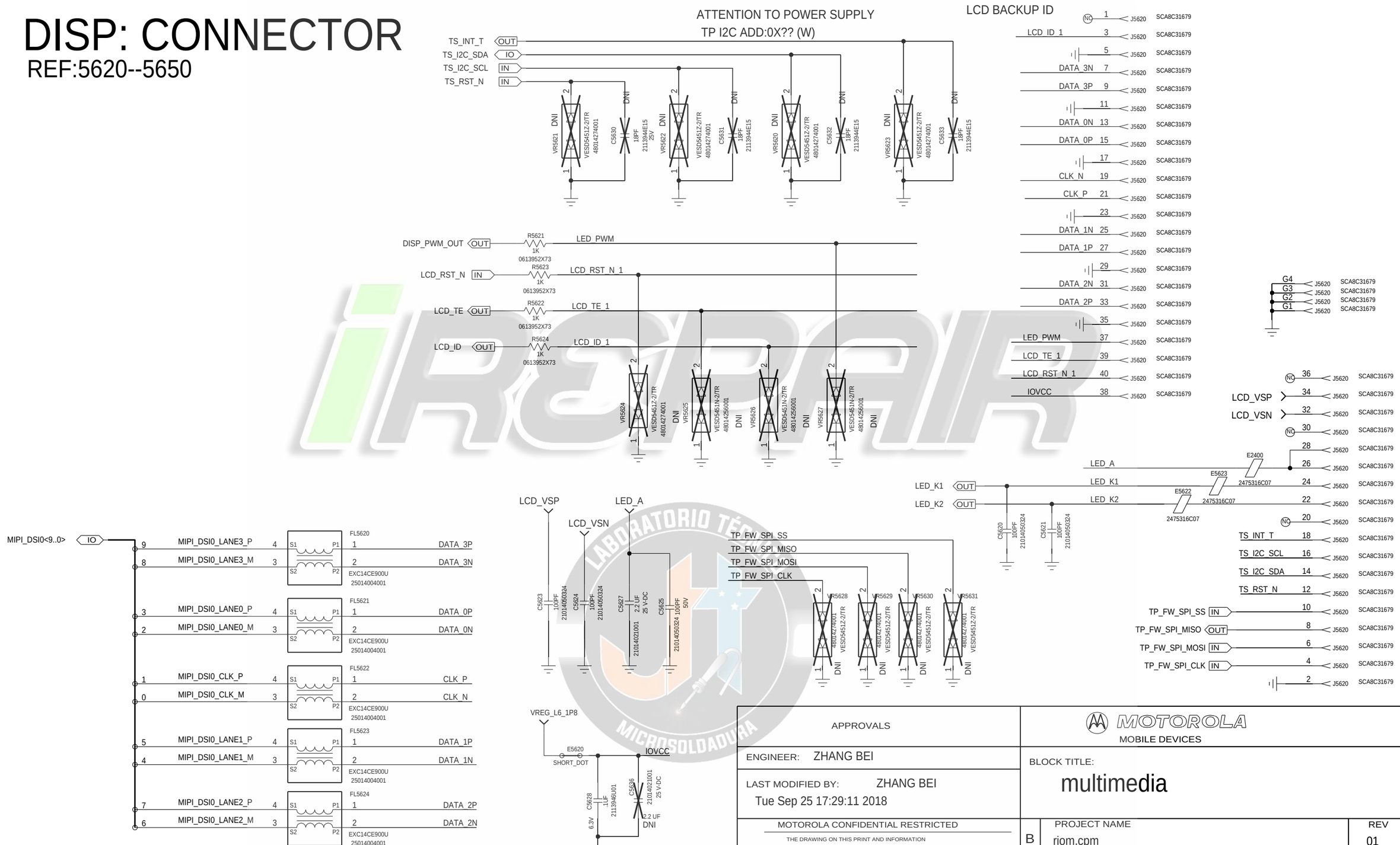

GND SHIELDED FOR MIPI DSI SIGNALS AS A GROUP
ADD GND STITCHING VIAS FOR EACH SIGNAL GROUP (EBI,CSI,DSI) WHEN POSSIBLE TO MINIMIZE RETURN CURRENT LOOP

APPROVALS	MOTOROLA MOBILE DEVICES
ENGINEER: ZHANG BEI	BLOCK TITLE: multimedia
LAST MODIFIED BY: ZHANG BEI Tue Sep 25 17:29:11 2018	
MOTOROLA CONFIDENTIAL RESTRICTED	B — PROJECT NAME: riom.cpm — REV: 01
THE DRAWING ON THIS PRINT AND INFORMATION THEREWITH ARE PROPRIETARY TO MOTOROLA AND SHALL NOT BE USED OR DISCUSSED IN WHOLE OR IN PART WITHOUT MOTOROLA'S CONSENT. © COPYRIGHT, MOTOROLA. THIS DOES NOT IMPLY PUBLICATION	CAD FILE NAME:
	PAGE 30 OF 63

iREPAIR
LABORATORIO TÉCNICO MICROSOLDADURA

XMCS: SENSORS

REF: 6100-6199

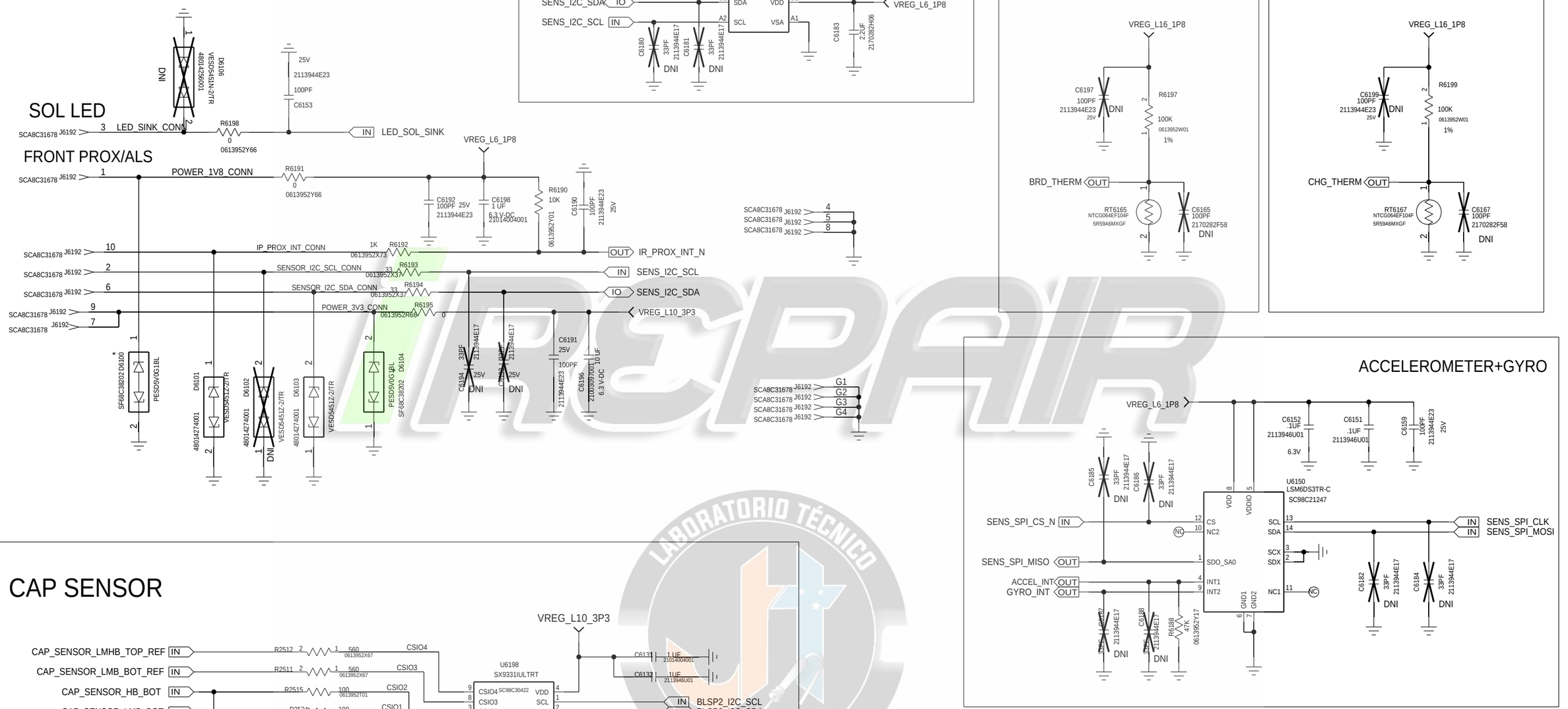

REPAIR
LABORATORIO TÉCNICO MOTOSOLDADURA

JOHN GORSICA/NATE CONNELL
APPROVALS

MOTOROLA
MOBILE DEVICES

ENGINEER: ZHANG JIA

BLOCK TITLE: xmcs

LAST MODIFIED BY: ZHANG JIA
Tue Sep 25 17:29:16 2018

MOTOROLA MOBILITY CONFIDENTIAL RESTRICTED-MDB TRACKED TRACKEDANDBLOCKED

MOTOROLA CONFIDENTIAL RESTRICTED

THE DRAWING ON THIS PRINT AND INFORMATION THEREWITH ARE PROPRIETARY TO MOTOROLA AND SHALL NOT BE USED OR DISCUSSED IN WHOLE OR IN PART WITHOUT MOTOROLA'S CONSENT.
© COPYRIGHT, MOTOROLA. THIS DOES NOT IMPLY PUBLICATION

	PROJECT NAME	REV
B	riom.cpm	01

CAD FILE NAME:

XMCS: SMART BOOST

REF 6400-6499

*** BOOST IC I2C ADD. 0X??

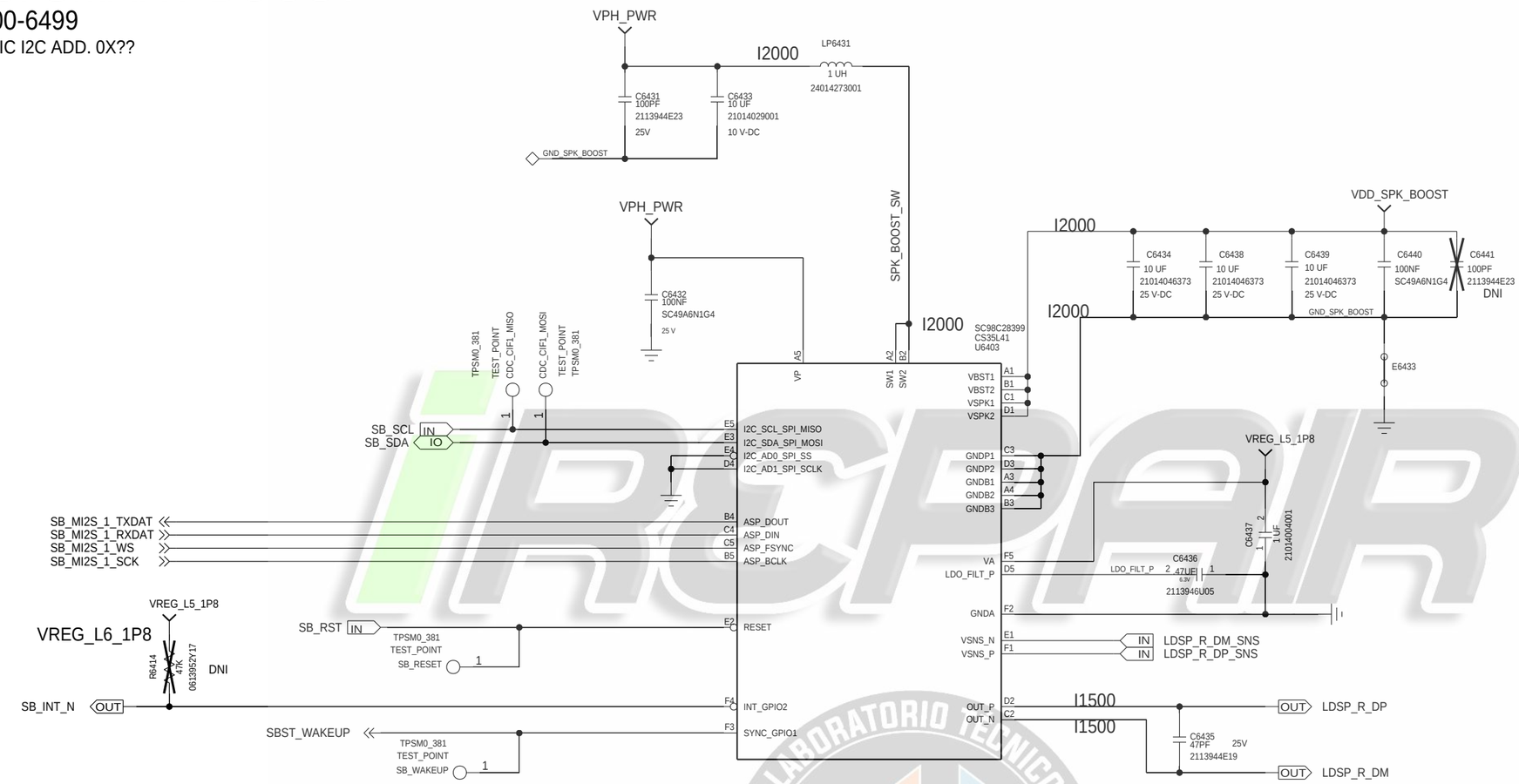

APPROVALS	MOTOROLA MOBILE DEVICES
ENGINEER: ZHANG BEI	BLOCK TITLE: xmcs
LAST MODIFIED BY: ZHANG BEI Tue Sep 25 17:29:17 2018	
MOTOROLA CONFIDENTIAL RESTRICTED	B — PROJECT NAME: riom.cpm — REV: 01
THE DRAWING ON THIS PRINT AND INFORMATION THEREWITH ARE PROPRIETARY TO MOTOROLA AND SHALL NOT BE USED OR DISCUSSED IN WHOLE OR IN PART WITHOUT MOTOROLA'S CONSENT. © COPYRIGHT, MOTOROLA. THIS DOES NOT IMPLY PUBLICATION	CAD FILE NAME:

iRCPAIR
LABORATORIO TECNICO MICROSOLDADURA

XMCS: CIRRUS CODEC

REF 6250-6299

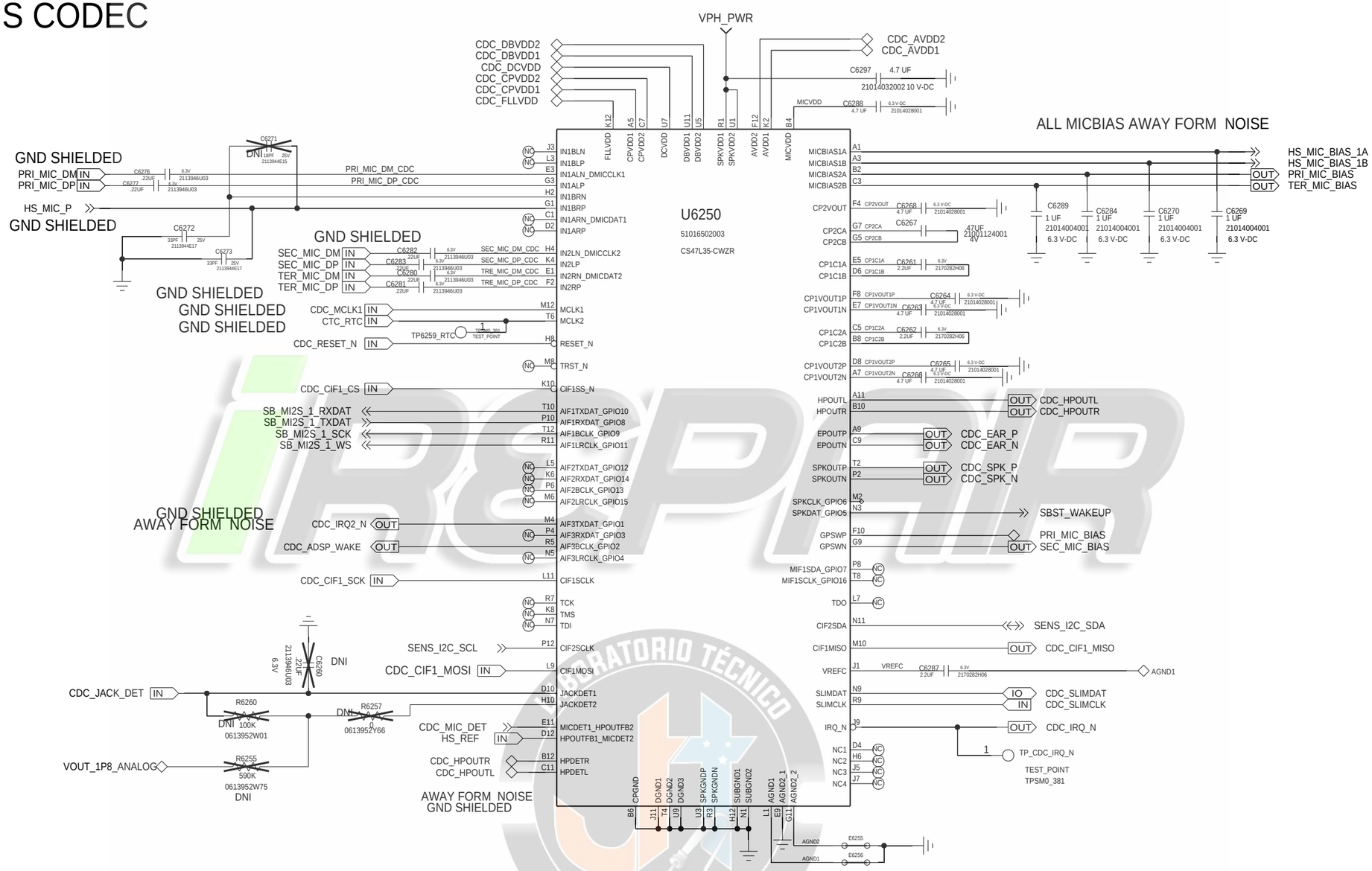

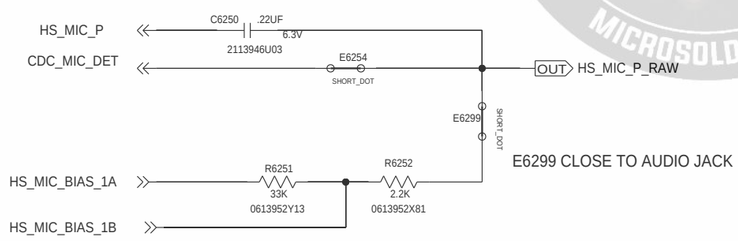

APPROVALS	MOTOROLA MOBILE DEVICES
ENGINEER: ZHANG BEI	BLOCK TITLE: xmcs
LAST MODIFIED BY: ZHANG BEI Tue Sep 25 17:29:16 2018	
MOTOROLA CONFIDENTIAL RESTRICTED	B — PROJECT NAME: riom.cpm — REV: 01
	CAD FILE NAME: — PAGE 33 OF 63

THE DRAWING ON THIS PRINT AND INFORMATION THEREWITH ARE PROPRIETARY TO MOTOROLA AND SHALL NOT BE USED OR DISCUSSED IN WHOLE OR IN PART WITHOUT MOTOROLA'S CONSENT.
© COPYRIGHT, MOTOROLA. THIS DOES NOT IMPLY PUBLICATION

XMCS: CODEC POWER

REF 6250-6299

1.2V POWER SUPPLY

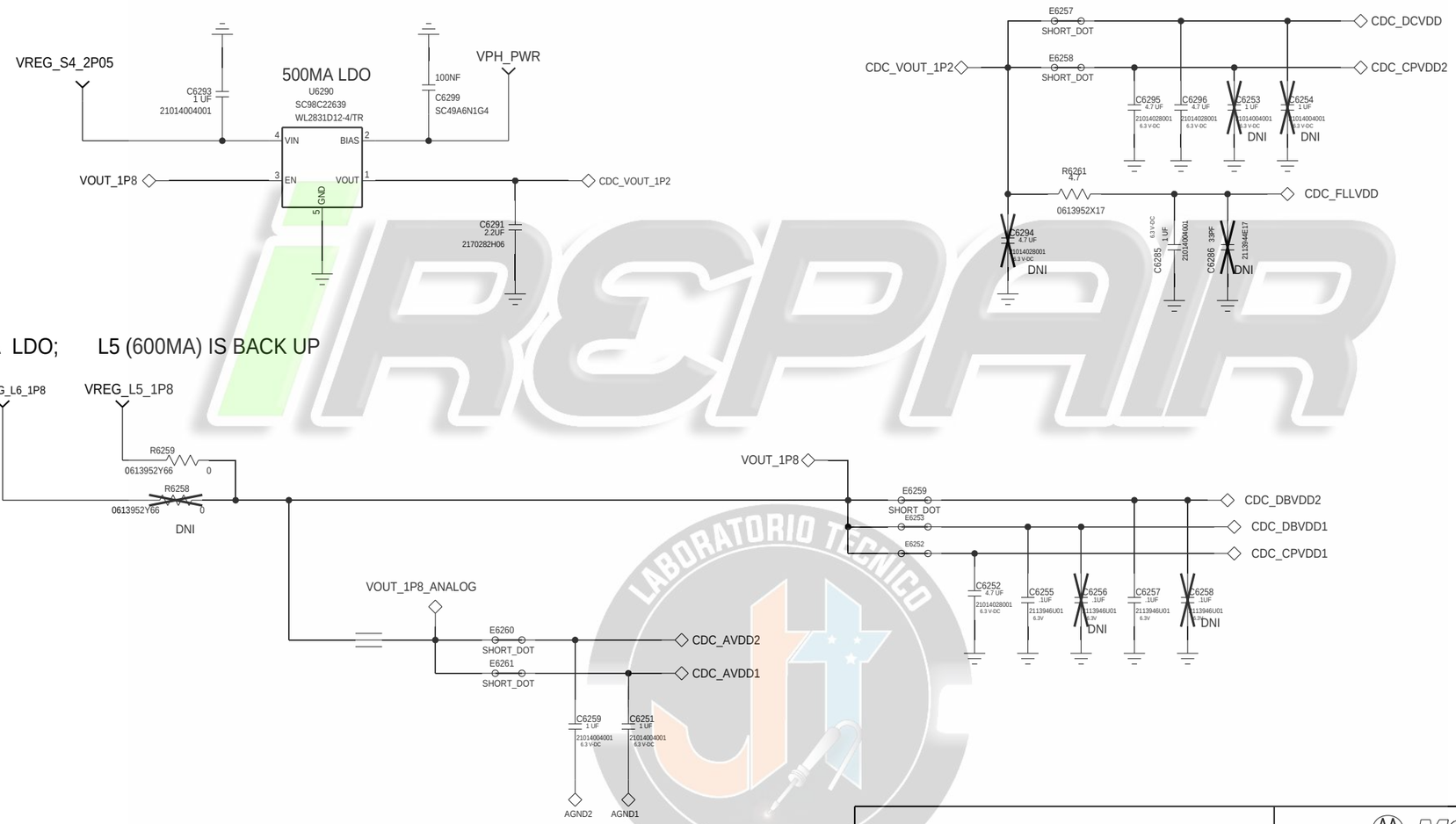

APPROVALS	MOTOROLA MOBILE DEVICES
ENGINEER: ZHANG BEI	BLOCK TITLE: xmcs
LAST MODIFIED BY: ZHANG BEI Tue Sep 25 17:29:17 2018	
MOTOROLA CONFIDENTIAL RESTRICTED	B — PROJECT NAME: riom.cpm — REV: 01
THE DRAWING ON THIS PRINT AND INFORMATION THEREWITH ARE PROPRIETARY TO MOTOROLA AND SHALL NOT BE USED OR DISCUSSED IN WHOLE OR IN PART WITHOUT MOTOROLA'S CONSENT. © COPYRIGHT, MOTOROLA. THIS DOES NOT IMPLY PUBLICATION	CAD FILE NAME:

iREPAIR
LABORATORIO TECNICO MICROSOLDADURA

CONN: PN553 NFC
REF: 4100-4199

PN553 I2C ADDRESS MAP

HIF2	HIF1	WRITE	READ
LOW	LOW	0X50	0X51
LOW	HIGH	0X52	0X53
HIGH	LOW	0X54	0X55
HIGH	HIGH	0X56	0X57

ADD FOR EVT

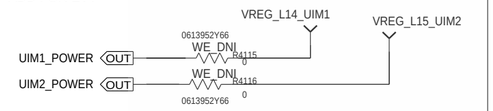

IIF NFC IS DNI, R4115 AND R4116 NEED SMT 0OHM

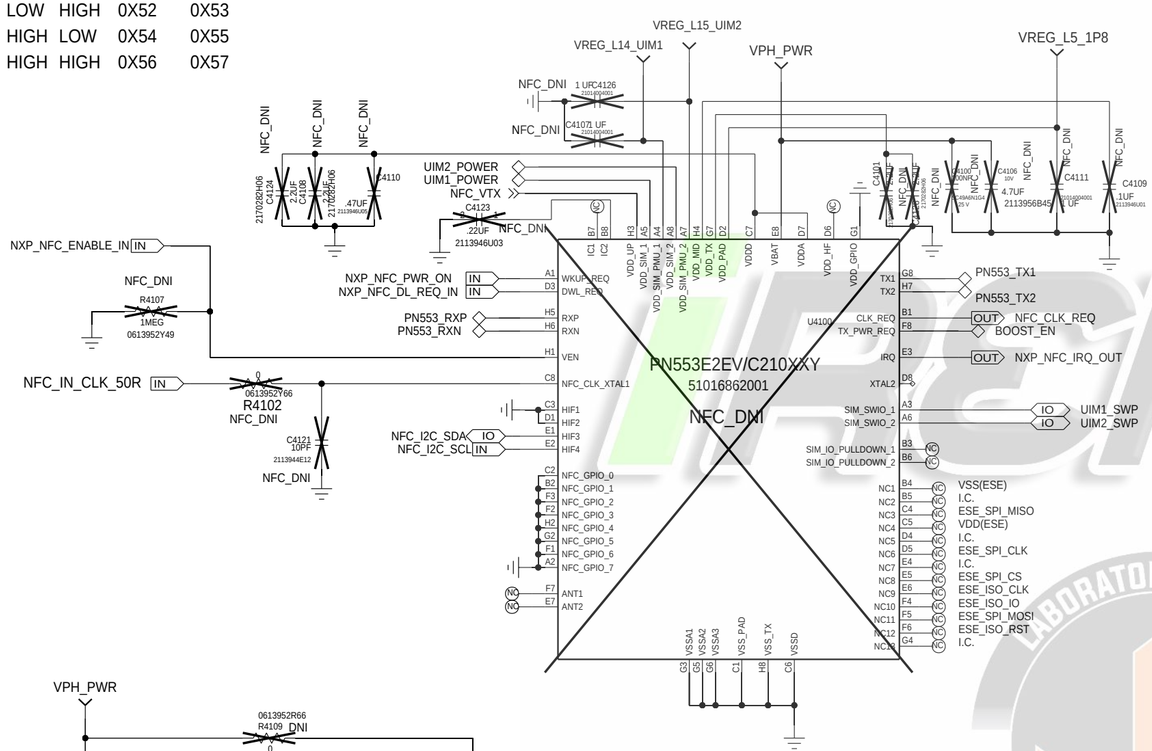

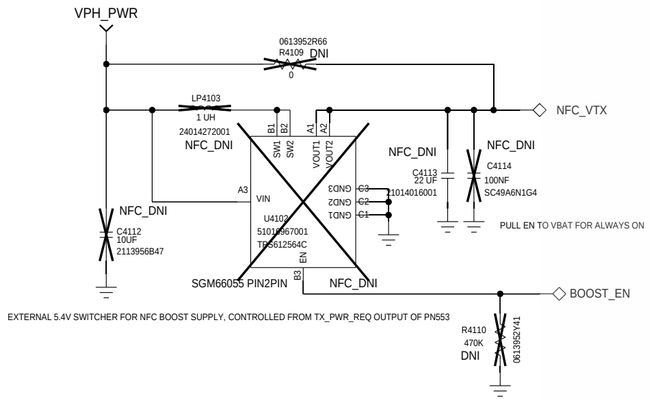

ANTENNA MATCHING

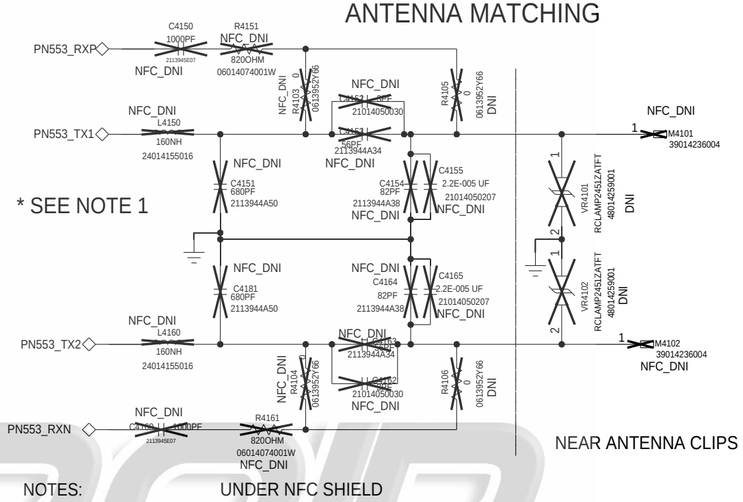

NOTES:

1. L4150 AND L4160 PLACEMENT MUST MINIMIZE MUTUAL INDUCTIVE COUPLING, OR CIRCUIT'S WIRELESS FUNCTION WILL BE SEVERELY IMPAIRED.

PLACE C4121 AND C4190 TO SHARE COMMON PAD

APPROVALS	MOTOROLA MOBILE DEVICES
ENGINEER:	BLOCK TITLE: connectivity_bb
LAST MODIFIED BY: Tue Sep 25 17:29:22 2018	
MOTOROLA CONFIDENTIAL RESTRICTED	B — PROJECT NAME: riom.cpm — REV: 01
	CAD FILE NAME: — PAGE 35 OF 63

THE DRAWING ON THIS PRINT AND INFORMATION THEREWITH ARE PROPRIETARY TO MOTOROLA AND SHALL NOT BE USED OR DISCUSSED IN WHOLE OR IN PART WITHOUT MOTOROLA'S CONSENT.
© COPYRIGHT, MOTOROLA. THIS DOES NOT IMPLY PUBLICATION

LABORATORIO TÉCNICO MICROSOLDADURA

1700:DTV

REF:1700-1799

iREPAIR
LABORATORIO TÉCNICO MICROSOLDADURA

APPROVALS	MOTOROLA MOBILE DEVICES	
ENGINEER:	BLOCK TITLE: connectivity_bb	
LAST MODIFIED BY: Wed Apr 11 12:22:22 2018		
MOTOROLA CONFIDENTIAL RESTRICTED	B	PROJECT NAME: riom.cpm — REV: 01
	CAD FILE NAME:	PAGE 36 OF 63

THE DRAWING ON THIS PRINT AND INFORMATION THEREWITH ARE PROPRIETARY TO MOTOROLA AND SHALL NOT BE USED OR DISCUSSED IN WHOLE OR IN PART WITHOUT MOTOROLA'S CONSENT.
© COPYRIGHT, MOTOROLA. THIS DOES NOT IMPLY PUBLICATION

AFE: MICS

REF: 5700-5789

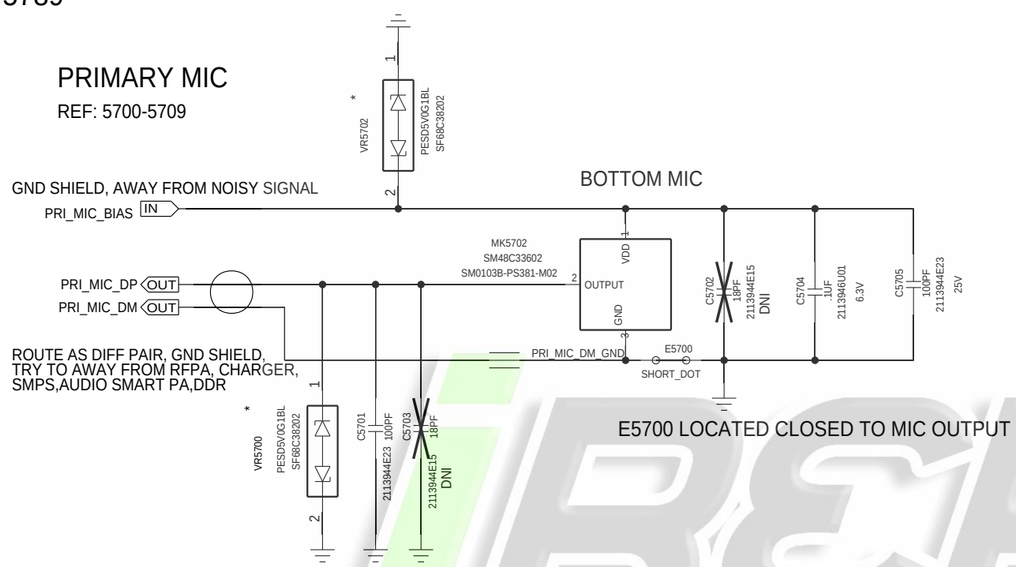

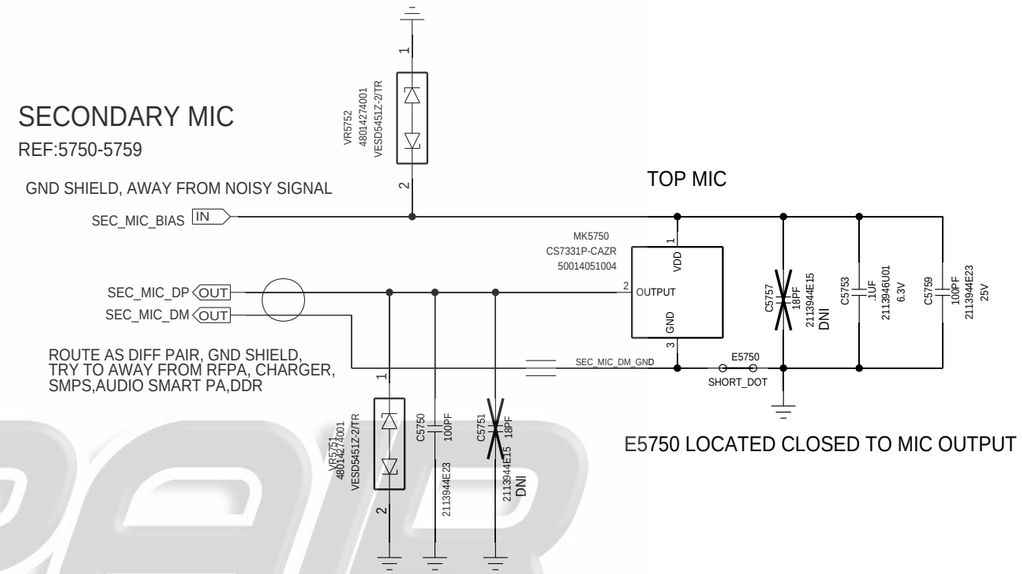

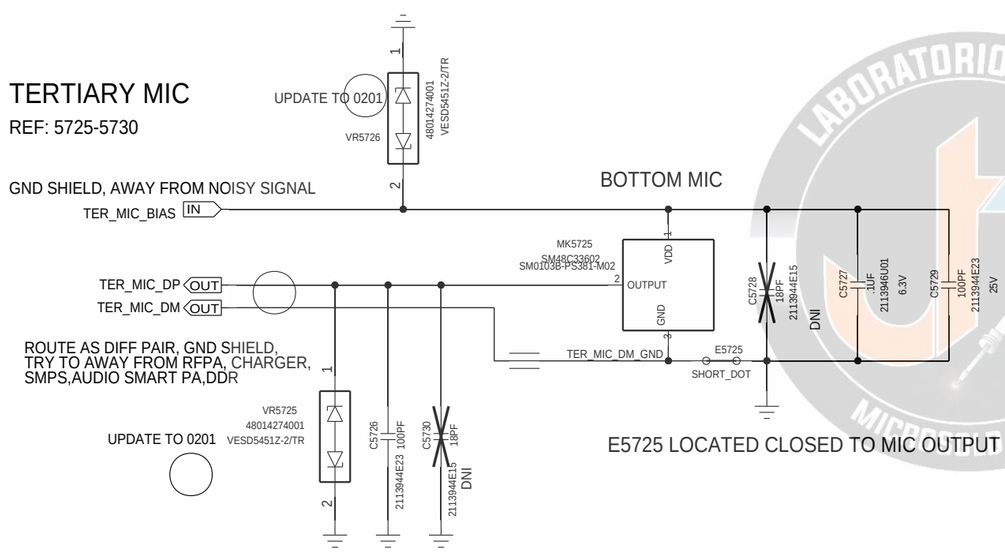

iREPAIR
LABORATORIO TÉCNICO MICROSOLDADURA

APPROVALS	MOTOROLA MOBILE DEVICES
ENGINEER: ZHANG BEI	BLOCK TITLE: audio_fe
LAST MODIFIED BY: ZHANG BEI Tue Sep 25 17:29:15 2018	
MOTOROLA CONFIDENTIAL RESTRICTED	B — PROJECT NAME: riom.cpm — REV: 01
	CAD FILE NAME: — PAGE 37 OF 63

THE DRAWING ON THIS PRINT AND INFORMATION THEREWITH ARE PROPRIETARY TO MOTOROLA AND SHALL NOT BE USED OR DISCUSSED IN WHOLE OR IN PART WITHOUT MOTOROLA'S CONSENT.
© COPYRIGHT, MOTOROLA. THIS DOES NOT IMPLY PUBLICATION

AFE: SPEAKERS

LOUDSPEARKER/EAR PIECE

REF:5790-5799

ROUTE AS DIFF PAIR
LINE WIDTH >=1MM

ADD STITCHING VIAS ALONGSIDE IF POSSIBLE

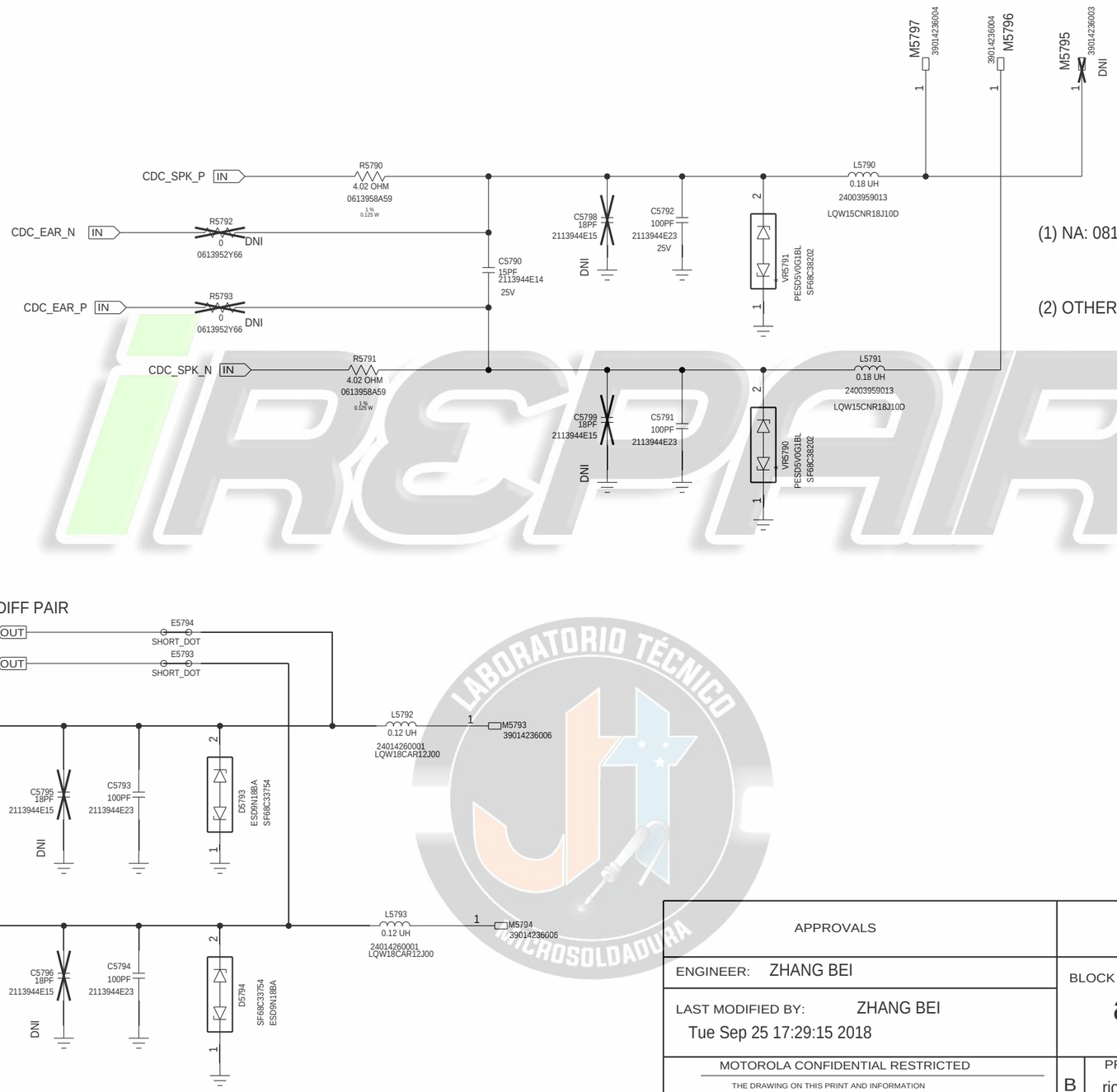

(1) NA: 0812 SPK SPRING---39014236003---M5797,M5796

(2) OTHER SKU: 0809 REC SPRING---39014236001---M5796,M5795

iREPAIR

LABORATORIO TÉCNICO MICROSOLDADURA

APPROVALS	MOTOROLA MOBILE DEVICES
ENGINEER: ZHANG BEI	BLOCK TITLE: audio_fe
LAST MODIFIED BY: ZHANG BEI Tue Sep 25 17:29:15 2018	
MOTOROLA CONFIDENTIAL RESTRICTED	B — PROJECT NAME: riom.cpm — REV: 01
THE DRAWING ON THIS PRINT AND INFORMATION THEREWITH ARE PROPRIETARY TO MOTOROLA AND SHALL NOT BE USED OR DISCUSSED IN WHOLE OR IN PART WITHOUT MOTOROLA'S CONSENT. © COPYRIGHT, MOTOROLA. THIS DOES NOT IMPLY PUBLICATION	CAD FILE NAME:

AFE: 3.5MM HEADSET

REF:4900-4949

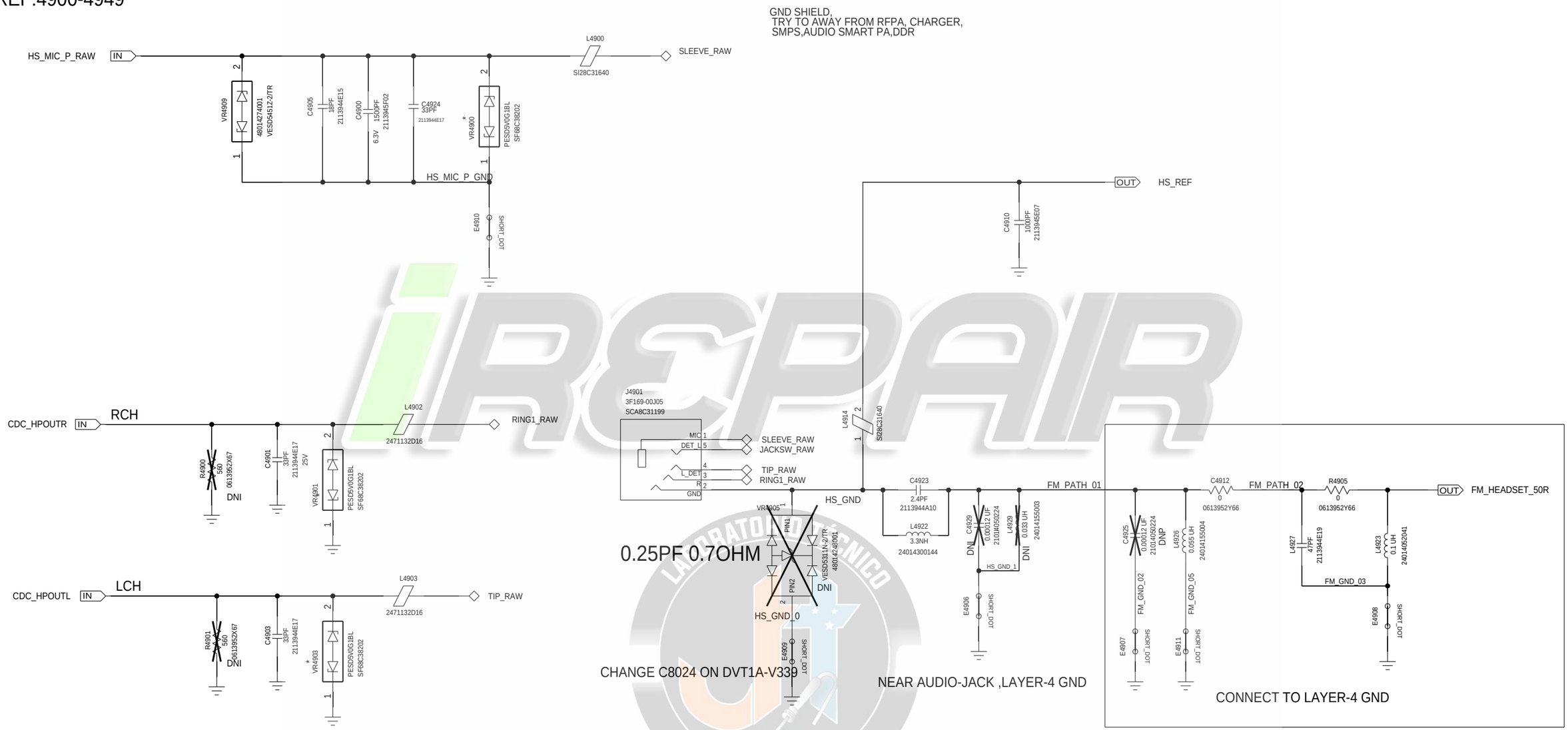

APPROVALS	MOTOROLA MOBILE DEVICES
ENGINEER: ZHANG BEI	BLOCK TITLE: audio_fe
LAST MODIFIED BY: ZHANG BEI Tue Sep 25 17:29:15 2018	
MOTOROLA CONFIDENTIAL RESTRICTED	B — PROJECT NAME: riom.cpm — REV: 01
THE DRAWING ON THIS PRINT AND INFORMATION THEREWITH ARE PROPRIETARY TO MOTOROLA AND SHALL NOT BE USED OR DISCUSSED IN WHOLE OR IN PART WITHOUT MOTOROLA'S CONSENT. © COPYRIGHT, MOTOROLA. THIS DOES NOT IMPLY PUBLICATION	CAD FILE NAME:

iRSPAIR LABORATORIO TÉCNICO MICROSOLDADURA

UI: SIDE KEY

VOL_UP/DOWN/GND TPS NEED P0 BRINGUP ONLY

REF:4000-4199

MECHANICAL KEYS

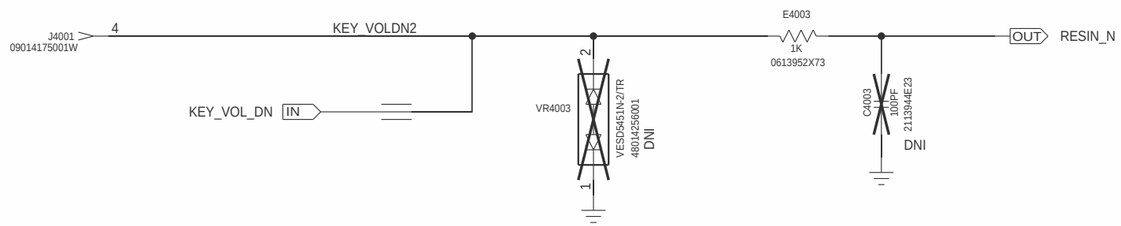

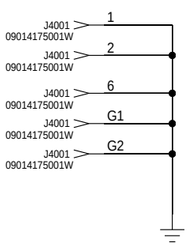

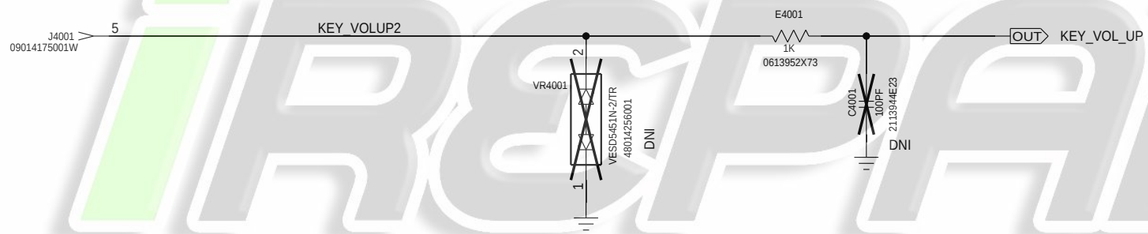

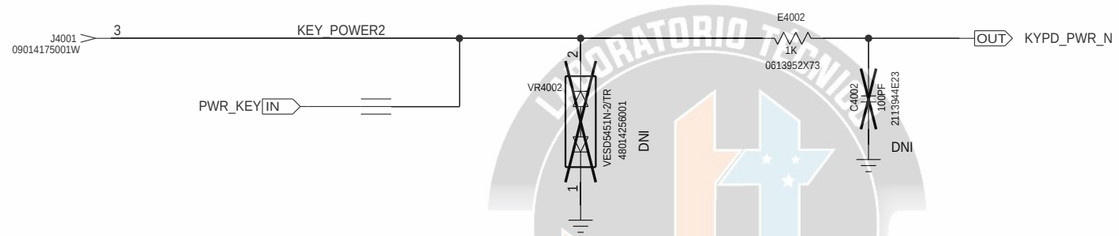

iREPAIR
LABORATORIO TÉCNICO MICROSOLDADURA

APPROVALS	MOTOROLA MOBILE DEVICES
ENGINEER: NATE CONNELL	BLOCK TITLE: ui
LAST MODIFIED BY: NATE CONNELL Tue Sep 25 17:29:14 2018	
MOTOROLA CONFIDENTIAL RESTRICTED	B — PROJECT NAME: riom.cpm — REV: 01
THE DRAWING ON THIS PRINT AND INFORMATION THEREWITH ARE PROPRIETARY TO MOTOROLA AND SHALL NOT BE USED OR DISCUSSED IN WHOLE OR IN PART WITHOUT MOTOROLA'S CONSENT. © COPYRIGHT, MOTOROLA. THIS DOES NOT IMPLY PUBLICATION	CAD FILE NAME:

UI: FPS

REF: 6600 - 6699

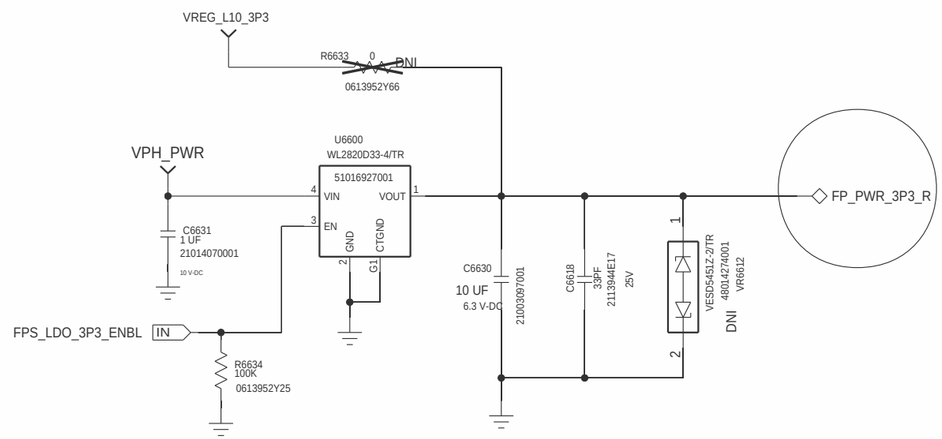

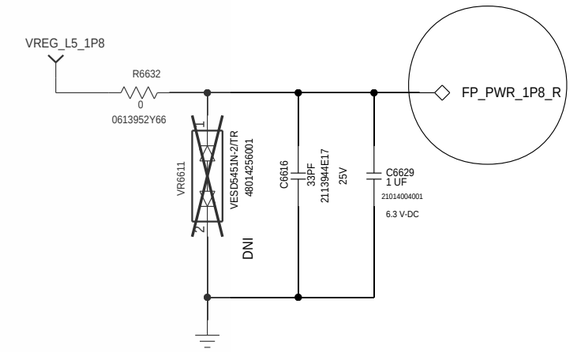

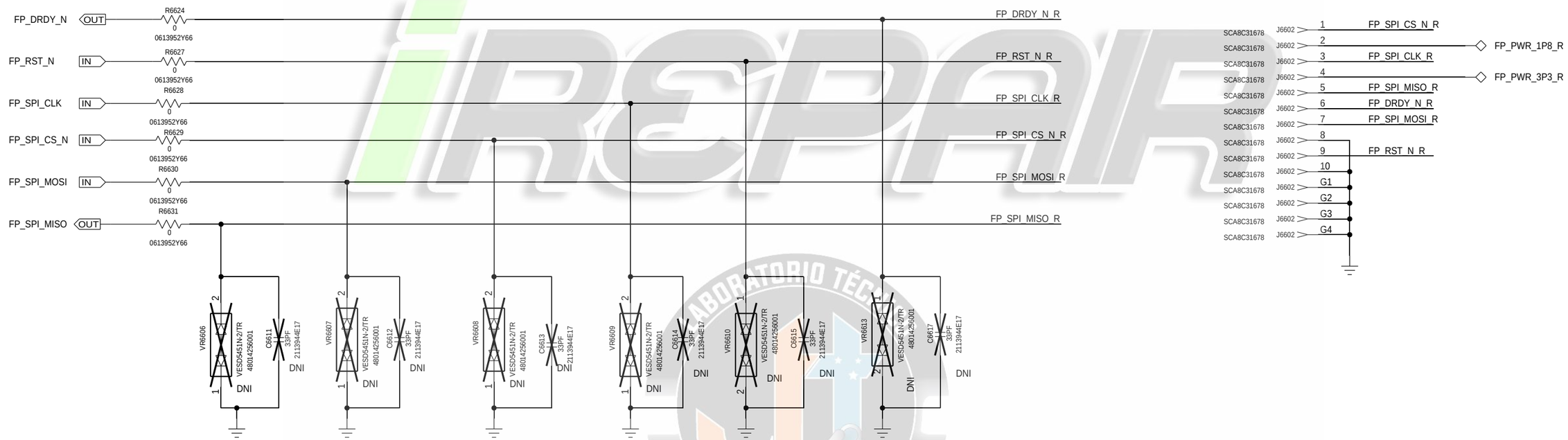

iREPAIR
LABORATORIO TÉCNICO MICROSOLDADURA

APPROVALS	MOTOROLA MOBILE DEVICES	
ENGINEER: NATE CONNELL	BLOCK TITLE: ui	
LAST MODIFIED BY: NATE CONNELL Tue Sep 25 17:29:13 2018		
MOTOROLA CONFIDENTIAL RESTRICTED	B	PROJECT NAME riom.cpm / REV 01
THE DRAWING ON THIS PRINT AND INFORMATION THEREWITH ARE PROPRIETARY TO MOTOROLA AND SHALL NOT BE USED OR DISCUSSED IN WHOLE OR IN PART WITHOUT MOTOROLA'S CONSENT. © COPYRIGHT, MOTOROLA. THIS DOES NOT IMPLY PUBLICATION	CAD FILE NAME:	PAGE 41 OF 63

UI: UIM

REF:4200-4499

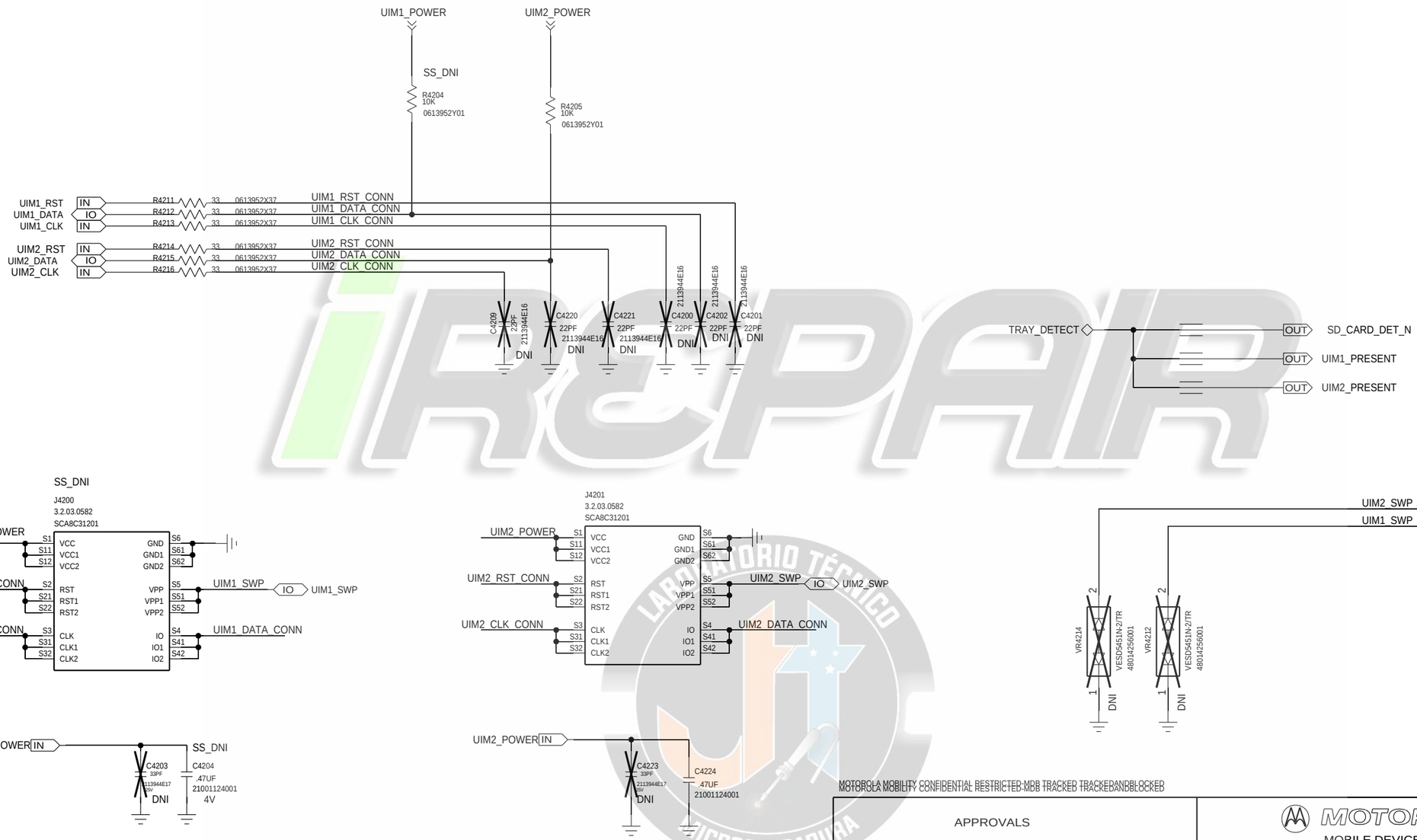

NOTE 1: USE 24.9K PULL-UP TO SUPPORT HOT SWAP WITH FREEZE-IO FEATURE.
NOTE 2: UIM_PWR BYPASS OF 0.33UF RECOMMENDED BY NFC IC SUPPLIER, PLACE NEAR CONNECTOR.

MOTOROLA MOBILITY CONFIDENTIAL RESTRICTED-MDB TRACKED TRACKEDANDBLOCKED
MOTOROLA MOBILITY CONFIDENTIAL RESTRICTED-MDB TRACKED TRACKEDANDBLOCKED

APPROVALS	MOTOROLA MOBILE DEVICES
ENGINEER: ZHANG BEI	BLOCK TITLE: ui
LAST MODIFIED BY: ZHANG BEI Tue Sep 25 17:29:13 2018	
MOTOROLA CONFIDENTIAL RESTRICTED	B — PROJECT NAME: riom.cpm — REV: 01
THE DRAWING ON THIS PRINT AND INFORMATION THEREWITH ARE PROPRIETARY TO MOTOROLA AND SHALL NOT BE USED OR DISCUSSED IN WHOLE OR IN PART WITHOUT MOTOROLA'S CONSENT. © COPYRIGHT, MOTOROLA. THIS DOES NOT IMPLY PUBLICATION	CAD FILE NAME:

UI: SDCARD

REF:4200-4499

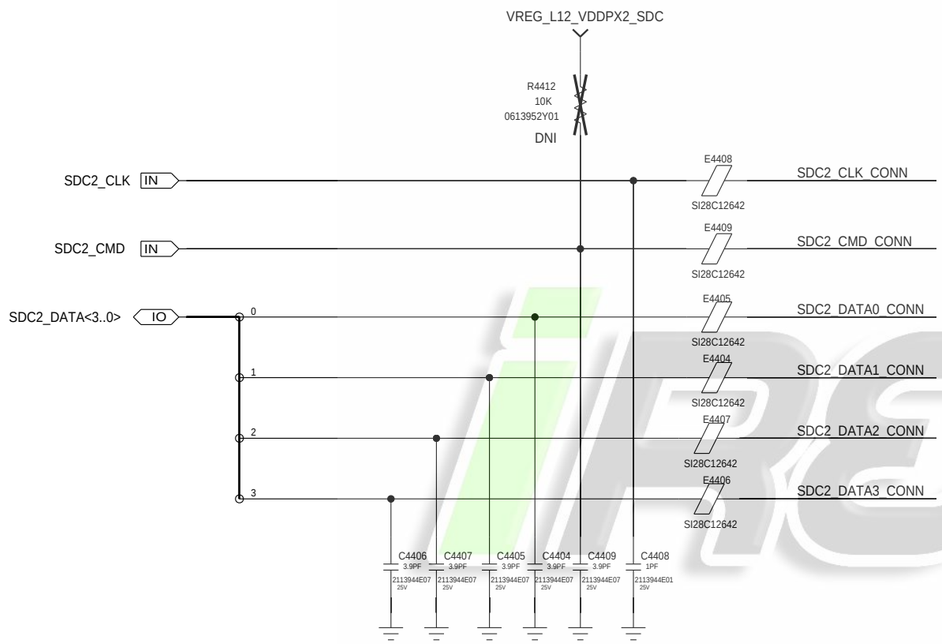

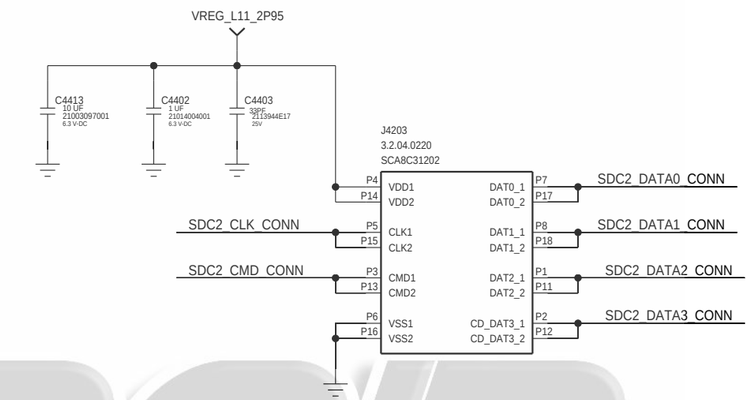

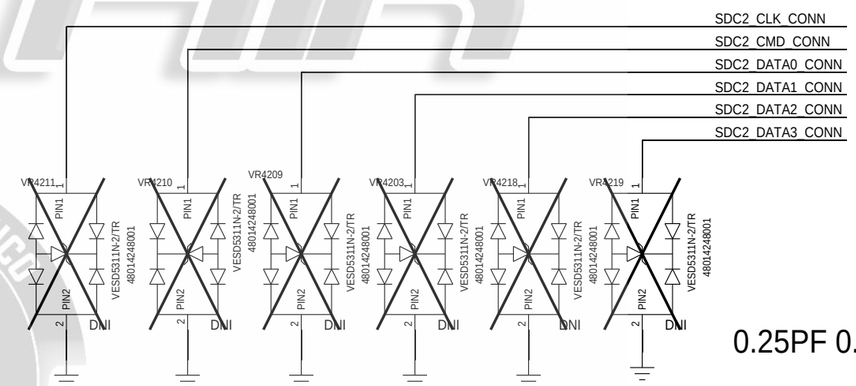

0.25PF 0.7OHM

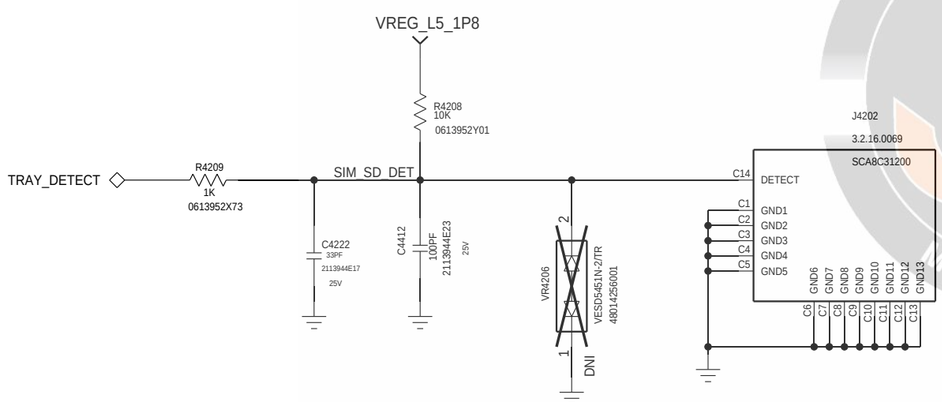

APPROVALS	MOTOROLA MOBILE DEVICES	
ENGINEER: ZHANG BEI	BLOCK TITLE: ui	
LAST MODIFIED BY: ZHANG BEI Tue Sep 25 17:29:14 2018		
MOTOROLA CONFIDENTIAL RESTRICTED	B	PROJECT NAME riom.cpm / REV 01
	CAD FILE NAME:	PAGE 43 OF 63

THE DRAWING ON THIS PRINT AND INFORMATION THEREWITH ARE PROPRIETARY TO MOTOROLA AND SHALL NOT BE USED OR DISCUSSED IN WHOLE OR IN PART WITHOUT MOTOROLA'S CONSENT.
© COPYRIGHT, MOTOROLA. THIS DOES NOT IMPLY PUBLICATION

SDM: RF INTERFACE

REF 3300-3399

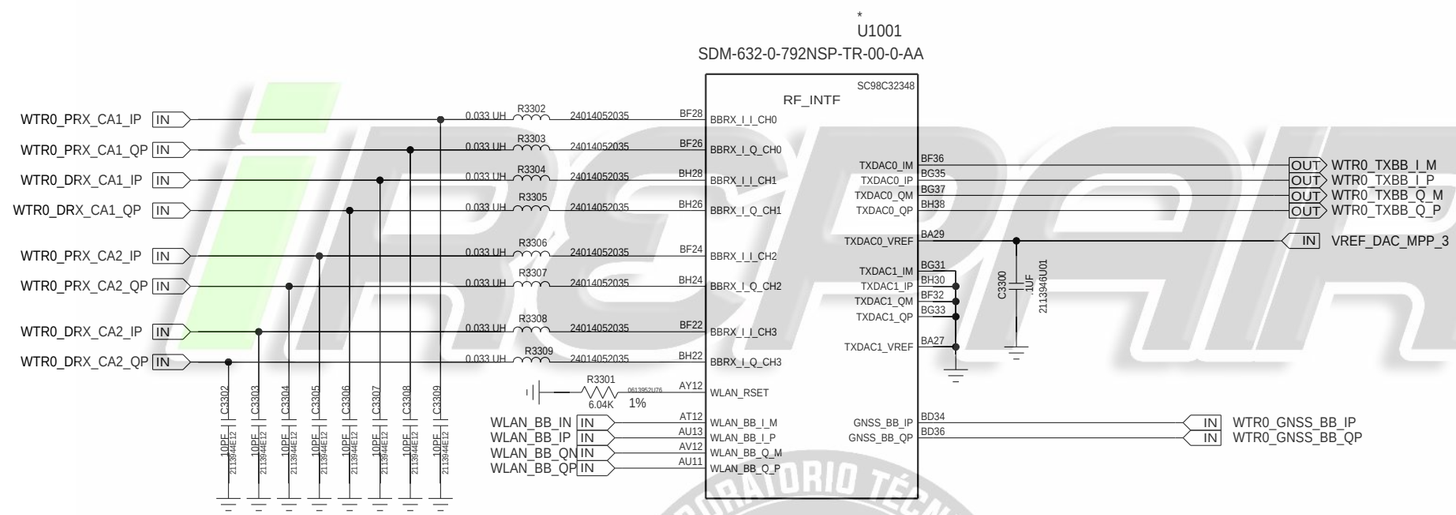

APPROVALS	MOTOROLA MOBILE DEVICES
ENGINEER:	BLOCK TITLE: block_sdm_rf_interface
LAST MODIFIED BY: Tue Sep 25 17:29:23 2018	
MOTOROLA CONFIDENTIAL RESTRICTED	B — PROJECT NAME: riom.cpm — REV: 01
THE DRAWING ON THIS PRINT AND INFORMATION THEREWITH ARE PROPRIETARY TO MOTOROLA AND SHALL NOT BE USED OR DISCUSSED IN WHOLE OR IN PART WITHOUT MOTOROLA'S CONSENT. © COPYRIGHT, MOTOROLA. THIS DOES NOT IMPLY PUBLICATION	CAD FILE NAME: — PAGE 44 OF 63

LABORATORIO TÉCNICO MICROSOLDADURA

WTR3925: POWER

REF 3000-3099

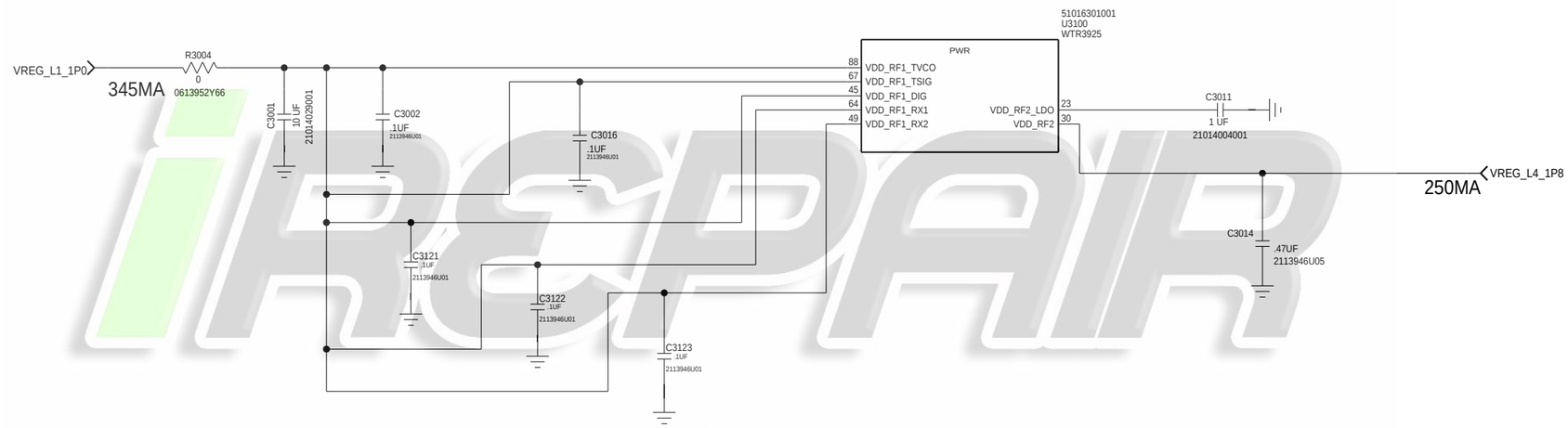

iREPAIR
LABORATORIO TÉCNICO MICROSOLDADURA

APPROVALS	MOTOROLA MOBILE DEVICES	
ENGINEER:	BLOCK TITLE: blk_wtr3925	
LAST MODIFIED BY: Tue Sep 25 17:29:10 2018		
MOTOROLA CONFIDENTIAL RESTRICTED	B	PROJECT NAME 8074qpm / 8074qm — REV 01
THE DRAWING ON THIS PRINT AND INFORMATION THEREWITH ARE PROPRIETARY TO MOTOROLA AND SHALL NOT BE USED OR DISCUSSED IN WHOLE OR IN PART WITHOUT MOTOROLA'S CONSENT. © COPYRIGHT, MOTOROLA. THIS DOES NOT IMPLY PUBLICATION	CAD FILE NAME:	PAGE 45 OF 63

WTR3925: TX/PWR/GROUND

REF 3100-3199

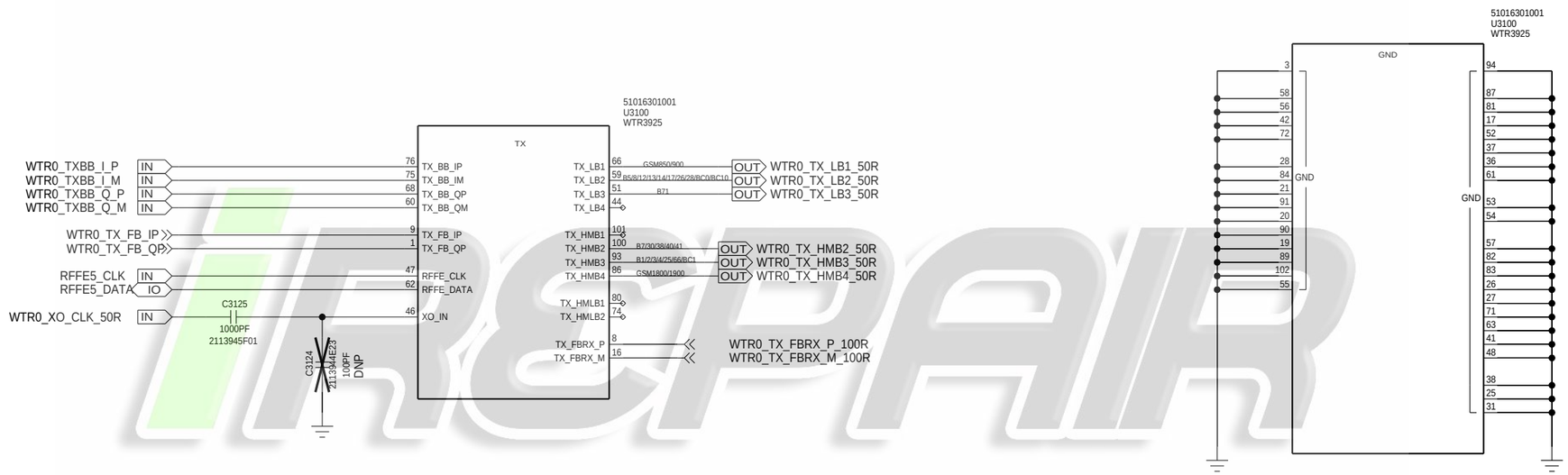

APPROVALS	MOTOROLA MOBILE DEVICES
ENGINEER:	BLOCK TITLE: blk_wtr3925
LAST MODIFIED BY: Tue Sep 25 17:29:10 2018	
MOTOROLA CONFIDENTIAL RESTRICTED	B — PROJECT NAME 8974 comm — REV 01
THE DRAWING ON THIS PRINT AND INFORMATION THEREWITH ARE PROPRIETARY TO MOTOROLA AND SHALL NOT BE USED OR DISCUSSED IN WHOLE OR IN PART WITHOUT MOTOROLA'S CONSENT. © COPYRIGHT, MOTOROLA. THIS DOES NOT IMPLY PUBLICATION	CAD FILE NAME: — PAGE 46 OF 63

iREPAIR
LABORATORIO TÉCNICO MICROSOLDADURA

WTR3925: PRX/DRX/GPS

REF 3200-3299

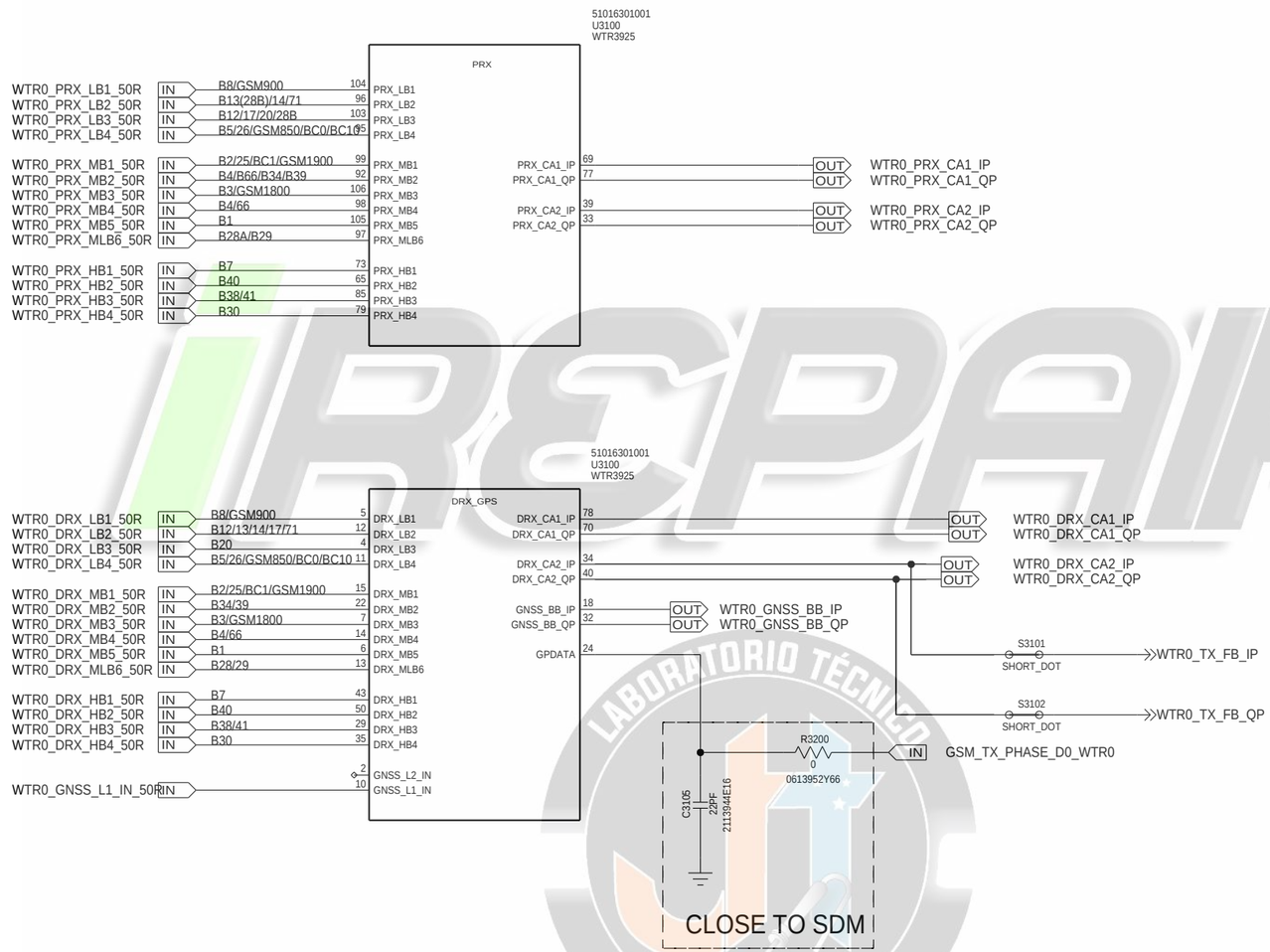

APPROVALS	MOTOROLA MOBILE DEVICES
ENGINEER:	BLOCK TITLE: blk_wtr3925
LAST MODIFIED BY: Tue Sep 25 17:29:11 2018	
MOTOROLA CONFIDENTIAL RESTRICTED	B — PROJECT NAME 8074 qpm — REV 01
THE DRAWING ON THIS PRINT AND INFORMATION THEREWITH ARE PROPRIETARY TO MOTOROLA AND SHALL NOT BE USED OR DISCUSSED IN WHOLE OR IN PART WITHOUT MOTOROLA'S CONSENT. © COPYRIGHT, MOTOROLA. THIS DOES NOT IMPLY PUBLICATION	CAD FILE NAME: — PAGE 47 OF 63

LABORATORIO TÉCNICO MICROSOLDADURA

RFFE: TRX ASM

REF 7000-7099

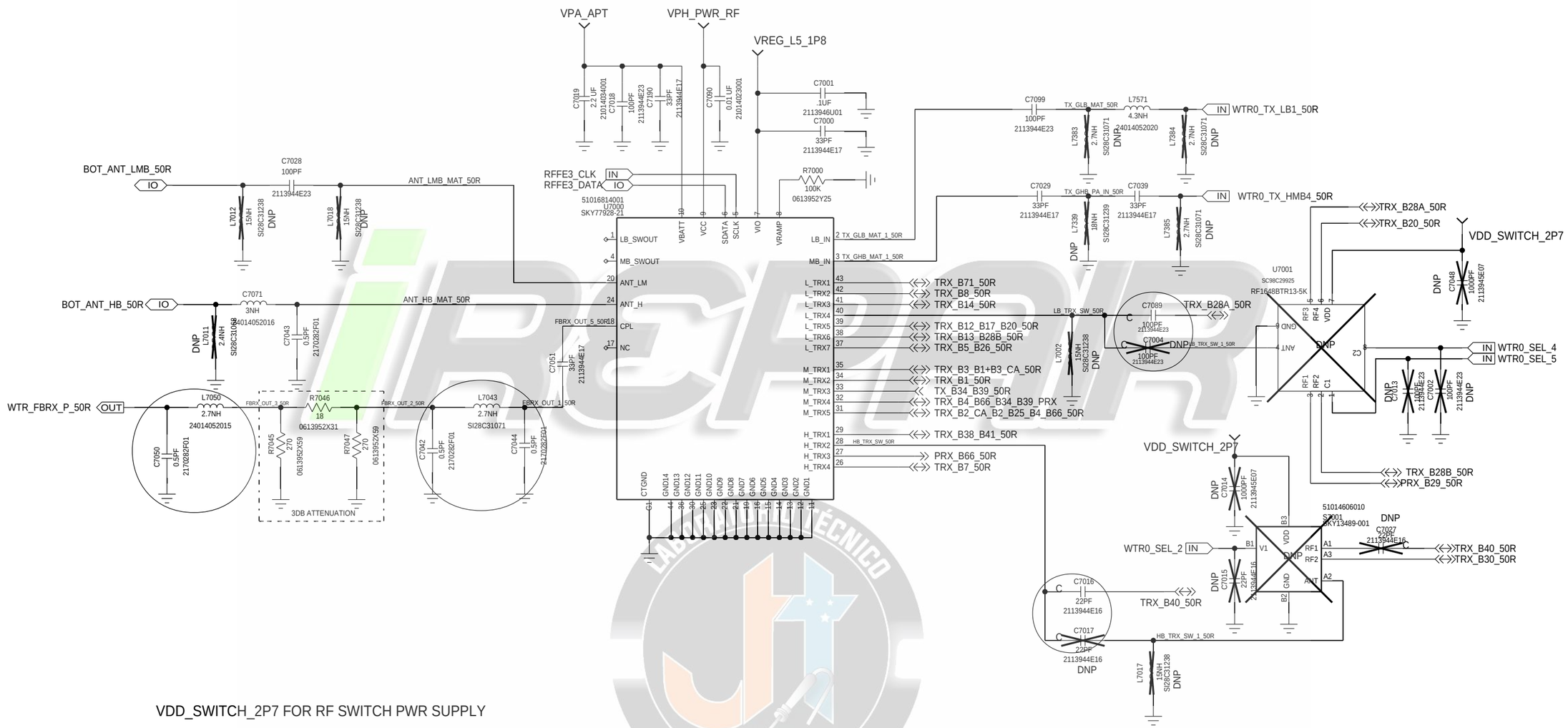

VDD_SWITCH_2P7 FOR RF SWITCH PWR SUPPLY

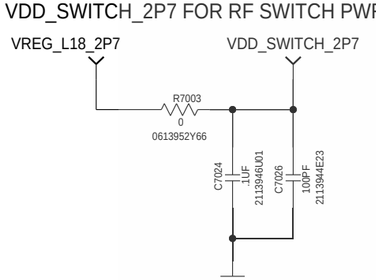

APPROVALS	MOTOROLA MOBILE DEVICES
ENGINEER:	BLOCK TITLE: rffe
LAST MODIFIED BY: Tue Sep 25 17:29:18 2018	
MOTOROLA CONFIDENTIAL RESTRICTED	B — PROJECT NAME: riom.cpm — REV: 01
THE DRAWING ON THIS PRINT AND INFORMATION THEREWITH ARE PROPRIETARY TO MOTOROLA AND SHALL NOT BE USED OR DISCUSSED IN WHOLE OR IN PART WITHOUT MOTOROLA'S CONSENT. © COPYRIGHT, MOTOROLA. THIS DOES NOT IMPLY PUBLICATION	CAD FILE NAME:
	PAGE 48 OF 63

iREPAIR LABORATORIO TÉCNICO MICROSOLDADURA

RFFE: SKY77643

REF 7150-7199

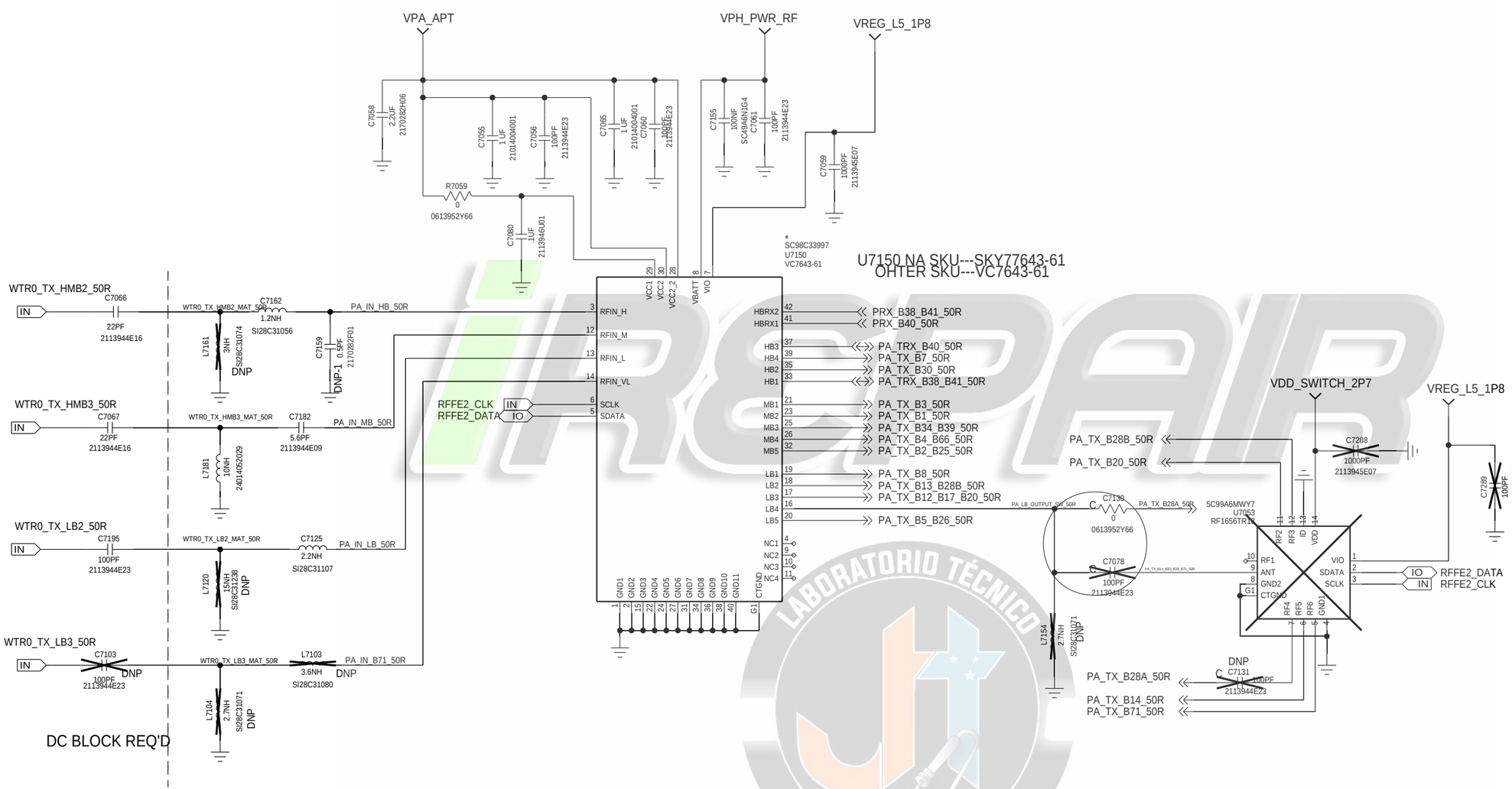

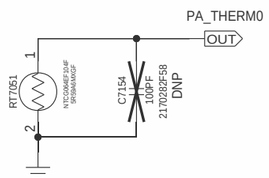

APPROVALS	MOTOROLA MOBILE DEVICES
ENGINEER:	BLOCK TITLE: rffe
LAST MODIFIED BY: Tue Sep 25 17:29:21 2018	
MOTOROLA CONFIDENTIAL RESTRICTED	B — PROJECT NAME: riom.cpm — REV: 01
THE DRAWING ON THIS PRINT AND INFORMATION THEREWITH ARE PROPRIETARY TO MOTOROLA AND SHALL NOT BE USED OR DISCUSSED IN WHOLE OR IN PART WITHOUT MOTOROLA'S CONSENT. © COPYRIGHT, MOTOROLA. THIS DOES NOT IMPLY PUBLICATION	CAD FILE NAME:

LABORATORIO TÉCNICO MICROSOLDADURA

RFFE: HB_TRX_B7,30,38,40,41
REF 7200-7299

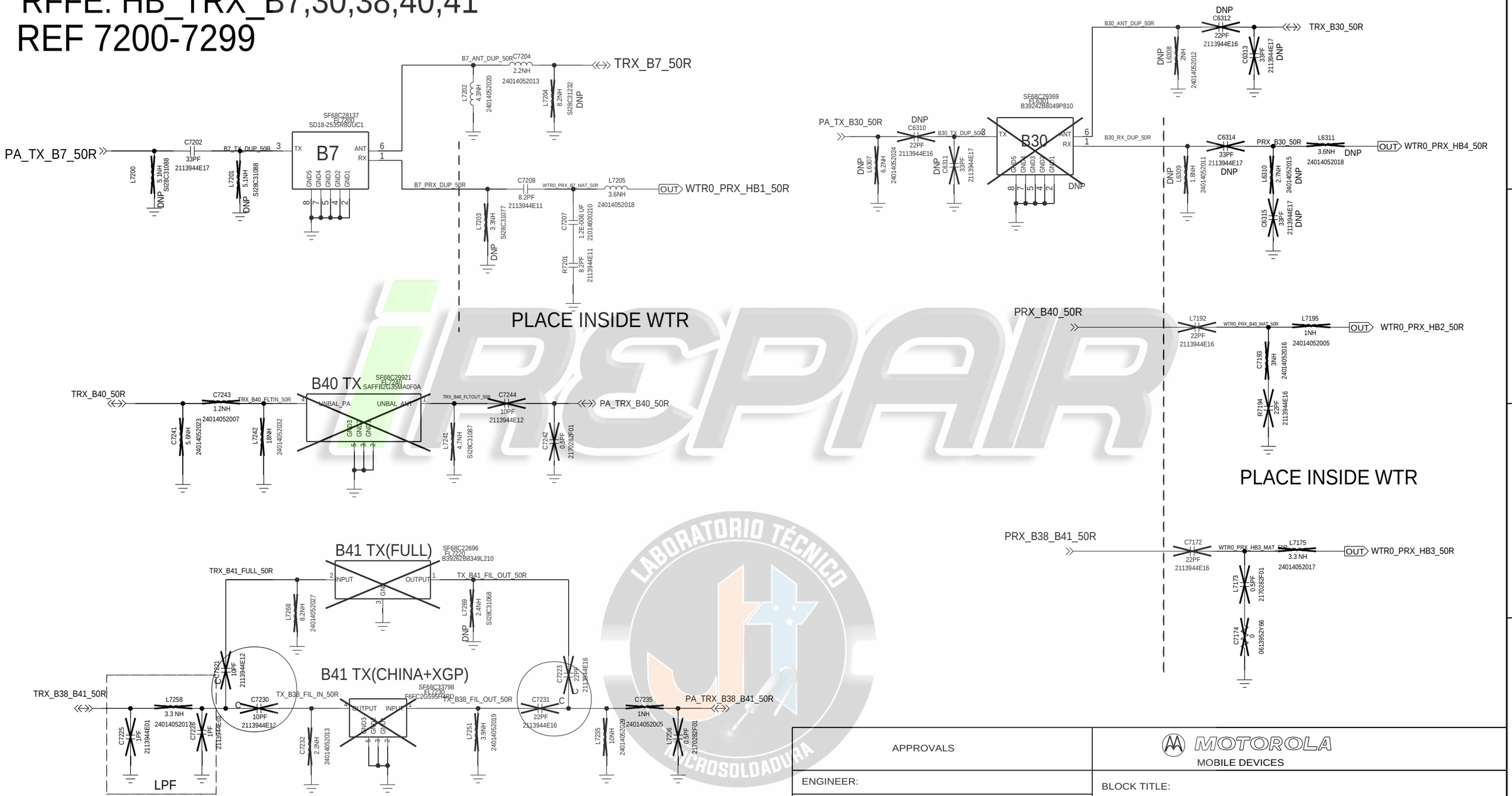

iRSPAR
LABORATORIO TÉCNICO MICROSOLDADURA

APPROVALS	MOTOROLA MOBILE DEVICES	
ENGINEER:	BLOCK TITLE: rffe	
LAST MODIFIED BY: Tue Sep 25 17:29:19 2018		
MOTOROLA CONFIDENTIAL RESTRICTED	B	PROJECT NAME: riom.cpm — REV: 01
	CAD FILE NAME:	PAGE 50 OF 63

THE DRAWING ON THIS PRINT AND INFORMATION THEREWITH ARE PROPRIETARY TO MOTOROLA AND SHALL NOT BE USED OR DISCUSSED IN WHOLE OR IN PART WITHOUT MOTOROLA'S CONSENT.
© COPYRIGHT, MOTOROLA. THIS DOES NOT IMPLY PUBLICATION

RFFE: MB_TRX_B2,4,34,39,G1900
REF 7300-7399

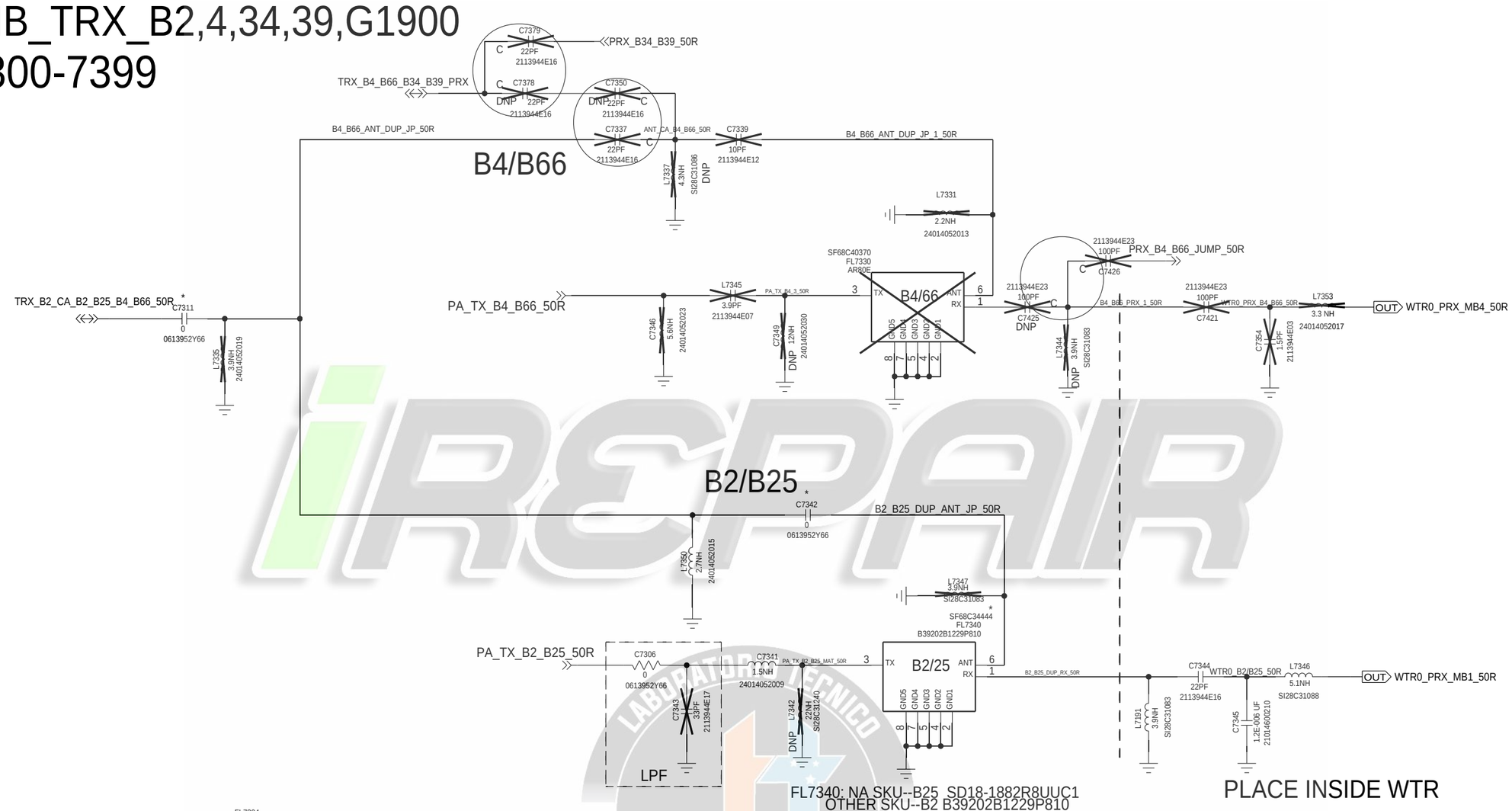

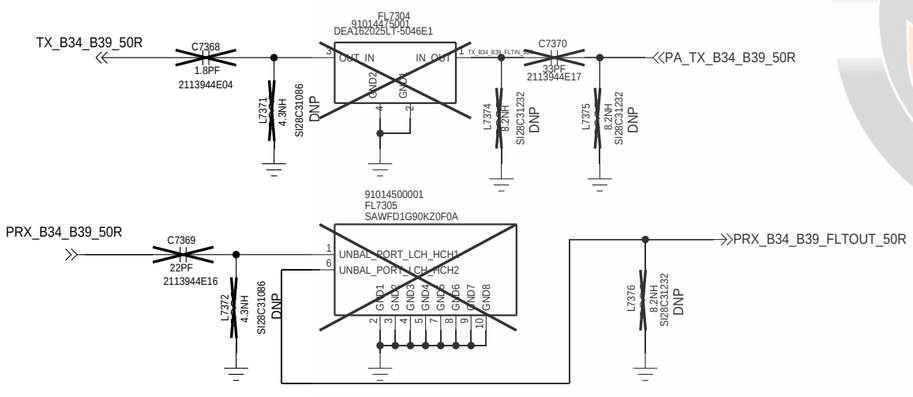

APPROVALS	MOTOROLA MOBILE DEVICES	
ENGINEER:	BLOCK TITLE: rffe	
LAST MODIFIED BY: Tue Sep 25 17:29:21 2018		
MOTOROLA CONFIDENTIAL RESTRICTED	B — PROJECT NAME: riom.cpm	REV: 01
THE DRAWING ON THIS PRINT AND INFORMATION THEREWITH ARE PROPRIETARY TO MOTOROLA AND SHALL NOT BE USED OR DISCUSSED IN WHOLE OR IN PART WITHOUT MOTOROLA'S CONSENT. © COPYRIGHT, MOTOROLA. THIS DOES NOT IMPLY PUBLICATION	CAD FILE NAME:	PAGE 51 OF 63

iREPAIR
LABORATORIO TECNICO MICROSOLDADURA

RFFE: MB_TRX_B1,3,66,G1800
REF 7350-7399

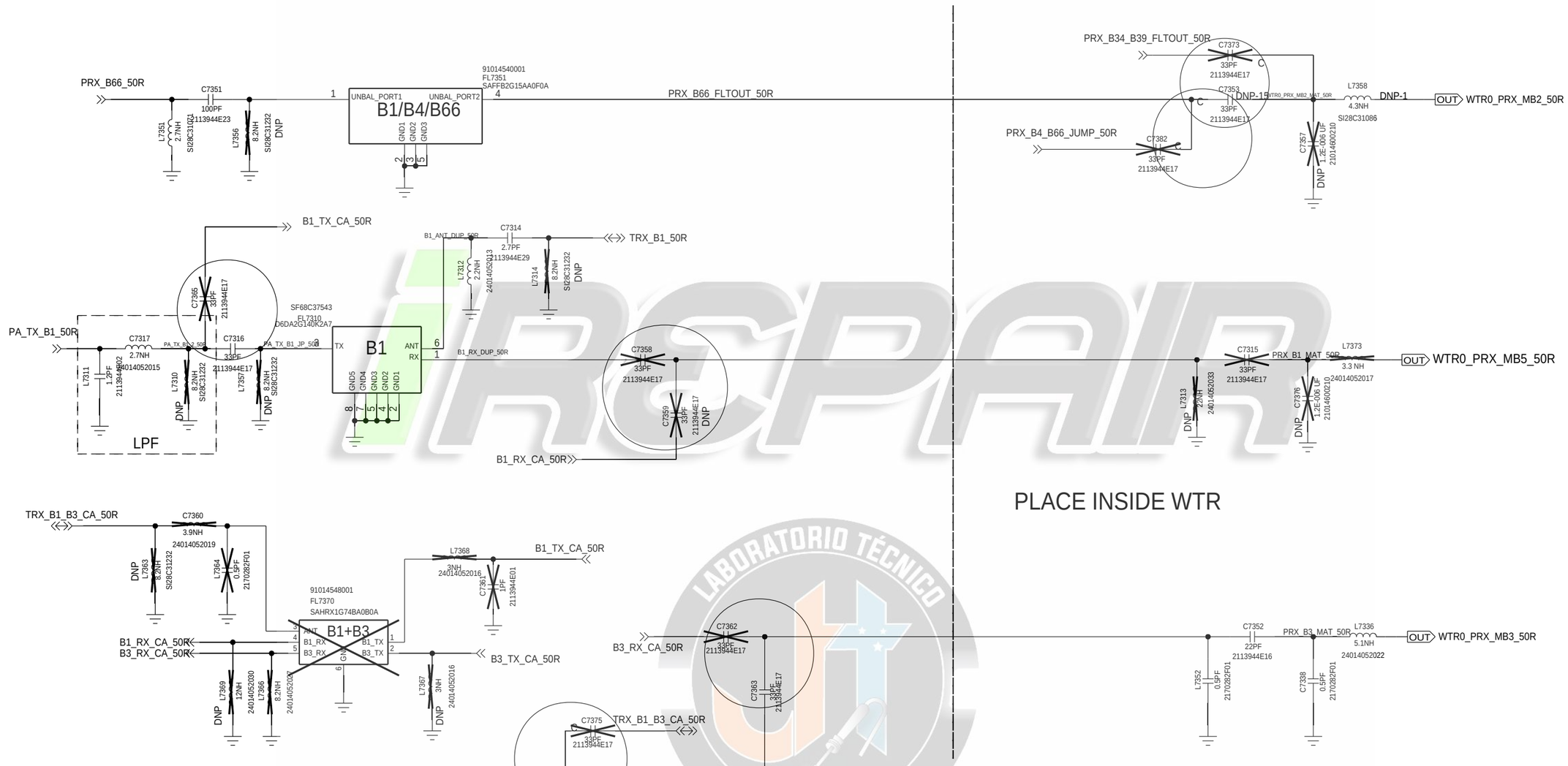

APPROVALS	MOTOROLA MOBILE DEVICES	
ENGINEER:	BLOCK TITLE: rffe	
LAST MODIFIED BY: Tue Sep 25 17:29:21 2018		
MOTOROLA CONFIDENTIAL RESTRICTED	B — PROJECT NAME: riom.cpm	REV: 01
	CAD FILE NAME:	PAGE 52 OF 63

THE DRAWING ON THIS PRINT AND INFORMATION THEREWITH ARE PROPRIETARY TO MOTOROLA AND SHALL NOT BE USED OR DISCUSSED IN WHOLE OR IN PART WITHOUT MOTOROLA'S CONSENT.
© COPYRIGHT, MOTOROLA. THIS DOES NOT IMPLY PUBLICATION

RFFE: LB_TRX_B12,17,13,14,20,28B,29
REF 7400-7499

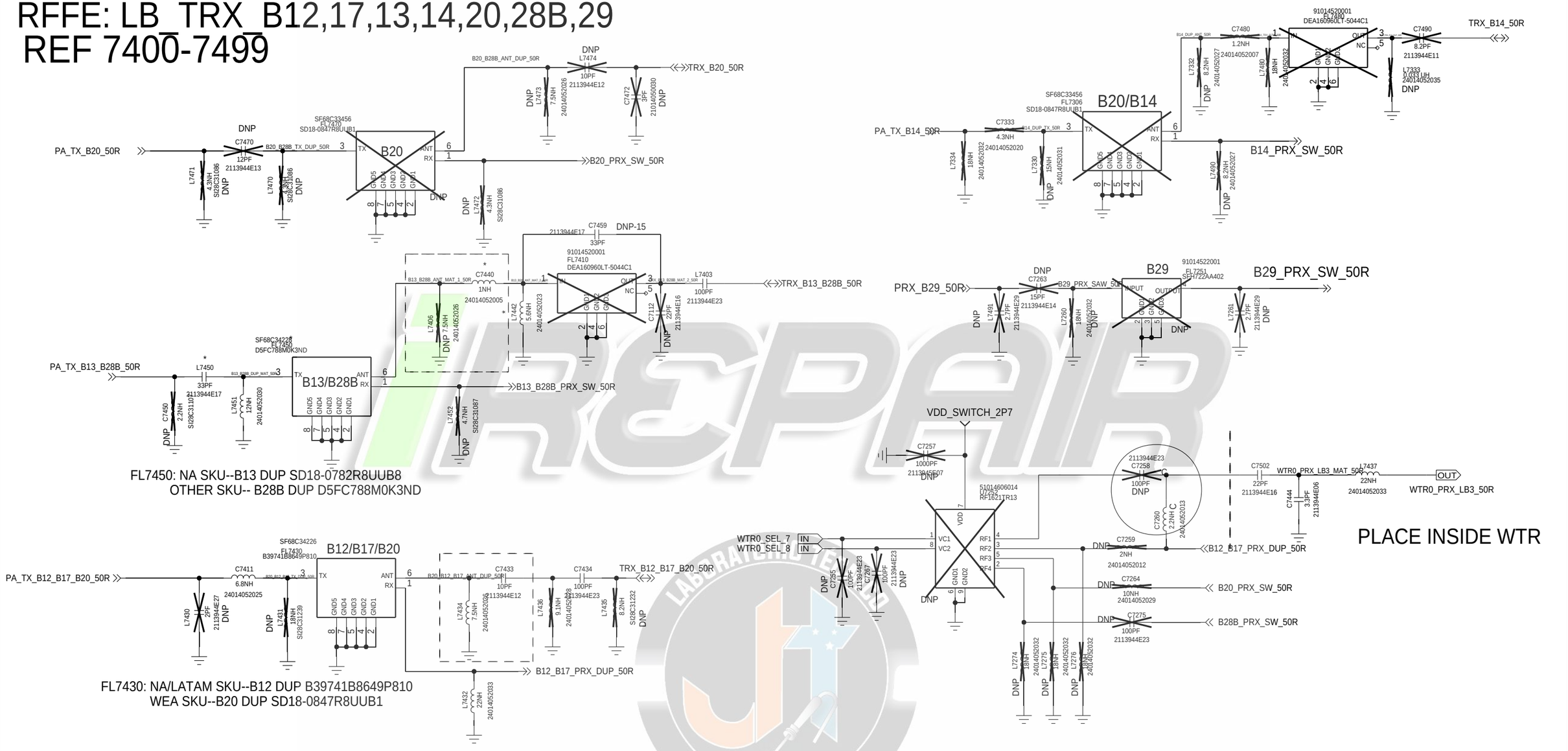

FL7450: NA SKU--B13 DUP SD18-0782R8UUB8
OTHER SKU-- B28B DUP D5FC788M0K3ND

FL7430: NA/LATAM SKU--B12 DUP B39741B8649P810
WEA SKU--B20 DUP SD18-0847R8UUB1

APPROVALS	MOTOROLA MOBILE DEVICES
ENGINEER:	BLOCK TITLE: rffe
LAST MODIFIED BY: Tue Sep 25 17:29:20 2018	
MOTOROLA CONFIDENTIAL RESTRICTED	PROJECT NAME: riom.cpm (B) — REV: 01
THE DRAWING ON THIS PRINT AND INFORMATION THEREWITH ARE PROPRIETARY TO MOTOROLA AND SHALL NOT BE USED OR DISCUSSED IN WHOLE OR IN PART WITHOUT MOTOROLA'S CONSENT. © COPYRIGHT, MOTOROLA. THIS DOES NOT IMPLY PUBLICATION	CAD FILE NAME:
	PAGE 53 OF 63

LABORATORIO DE MICROSOLDADURA

RFFE: LB_TRX_B5,8,26,28A,71,G850/900

REF 7400-7549

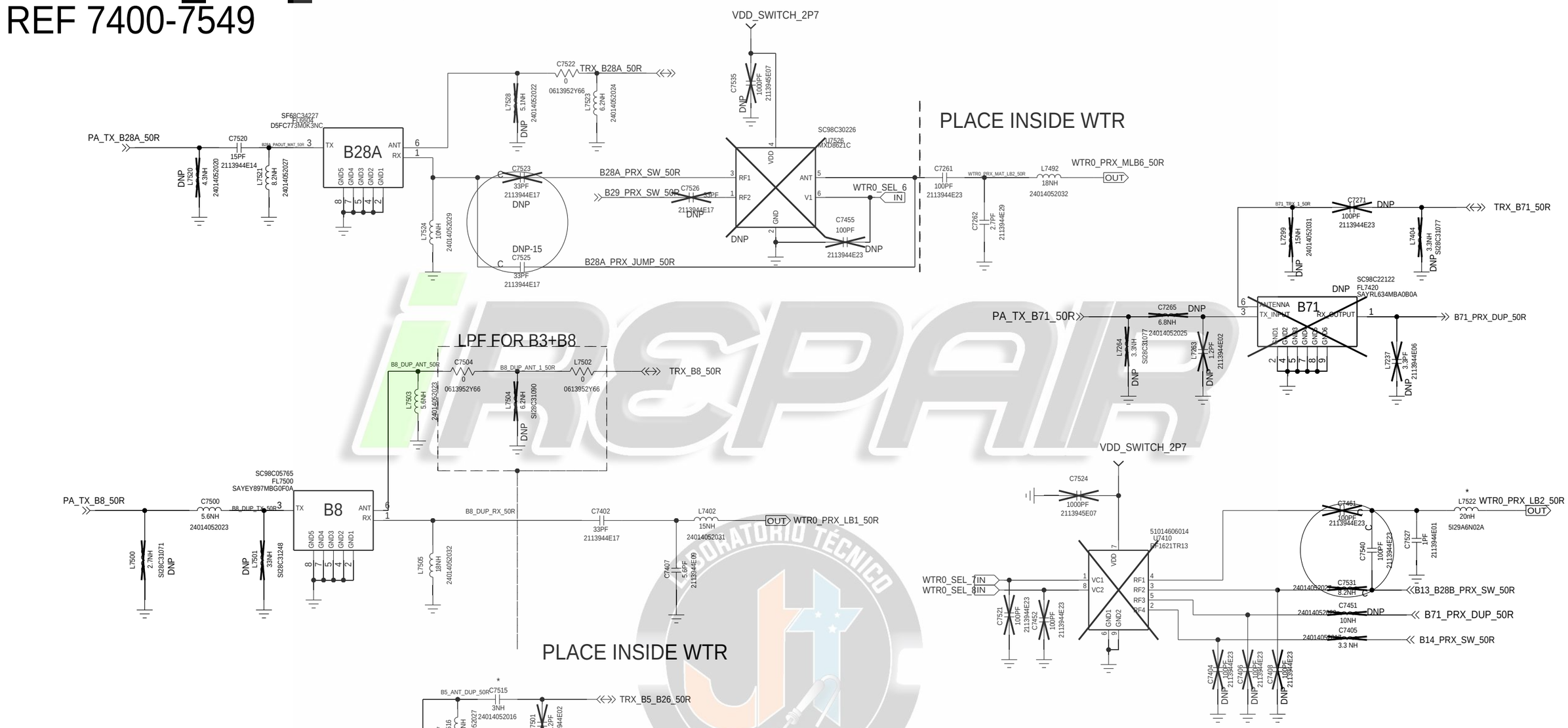

APPROVALS	MOTOROLA MOBILE DEVICES
ENGINEER:	BLOCK TITLE: rffe
LAST MODIFIED BY: Tue Sep 25 17:29:20 2018	
MOTOROLA CONFIDENTIAL RESTRICTED	PROJECT NAME: riom.cpm — REV: 01
THE DRAWING ON THIS PRINT AND INFORMATION THEREWITH ARE PROPRIETARY TO MOTOROLA AND SHALL NOT BE USED OR DISCUSSED IN WHOLE OR IN PART WITHOUT MOTOROLA'S CONSENT. © COPYRIGHT, MOTOROLA. THIS DOES NOT IMPLY PUBLICATION	CAD FILE NAME:
	PAGE 54 OF 63

iRSPAIR
LABORATORIO TÉCNICO MICROSOLDADURA

RFFE: DRX_ASM_HB_B7,30,38,40,41

REF 7600-7699

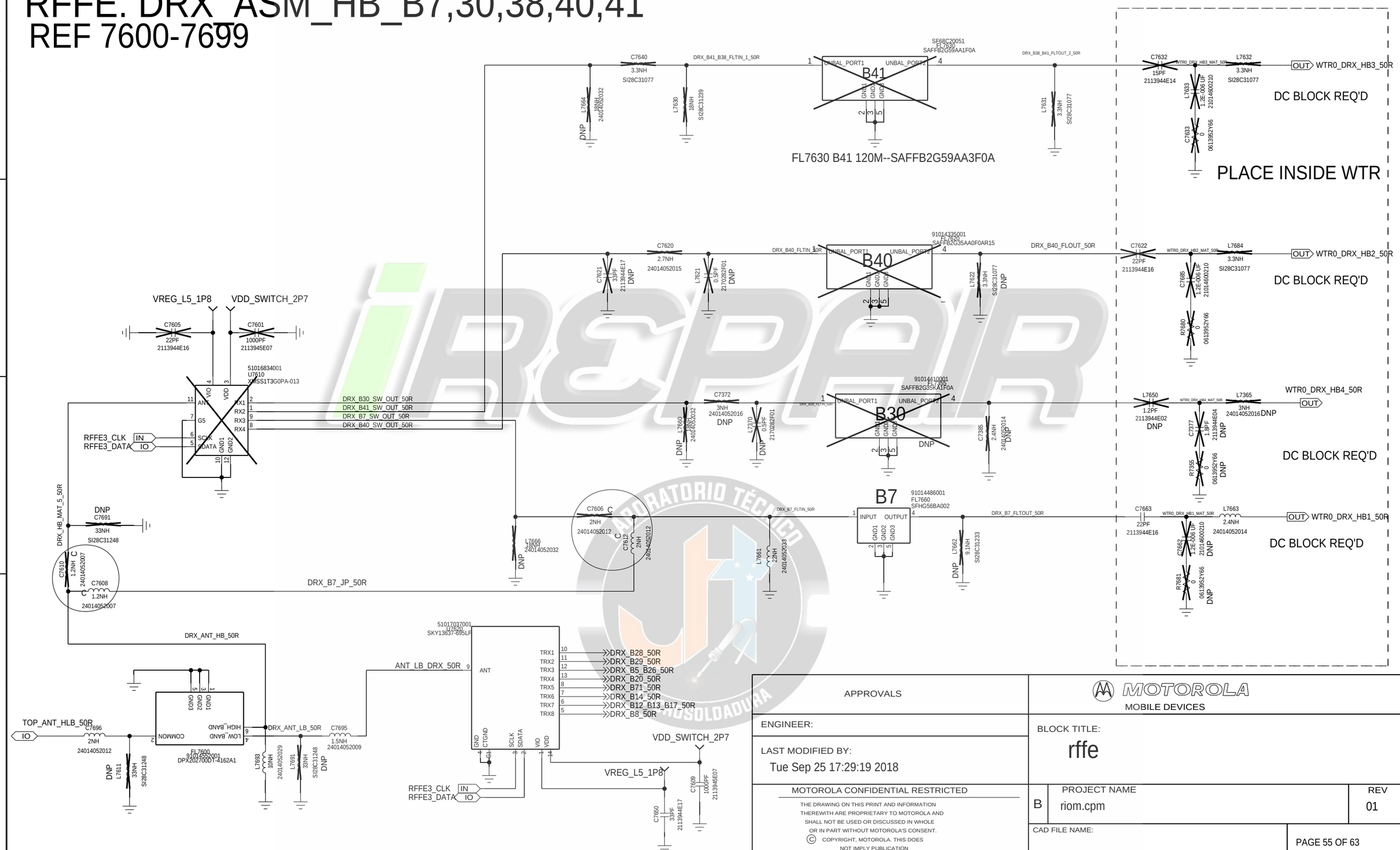

APPROVALS	MOTOROLA MOBILE DEVICES	
ENGINEER:	BLOCK TITLE: rffe	
LAST MODIFIED BY: Tue Sep 25 17:29:19 2018		
MOTOROLA CONFIDENTIAL RESTRICTED	B — PROJECT NAME: riom.cpm	REV 01
THE DRAWING ON THIS PRINT AND INFORMATION THEREWITH ARE PROPRIETARY TO MOTOROLA AND SHALL NOT BE USED OR DISCUSSED IN WHOLE OR IN PART WITHOUT MOTOROLA'S CONSENT. © COPYRIGHT, MOTOROLA. THIS DOES NOT IMPLY PUBLICATION	CAD FILE NAME:	PAGE 55 OF 63

iREPAIR LABORATORIO TÉCNICO SOLDADURA

RFFE: MB_DRX_B1,2,3,4,25,66,GSM1800/1900
REF 7700-7749

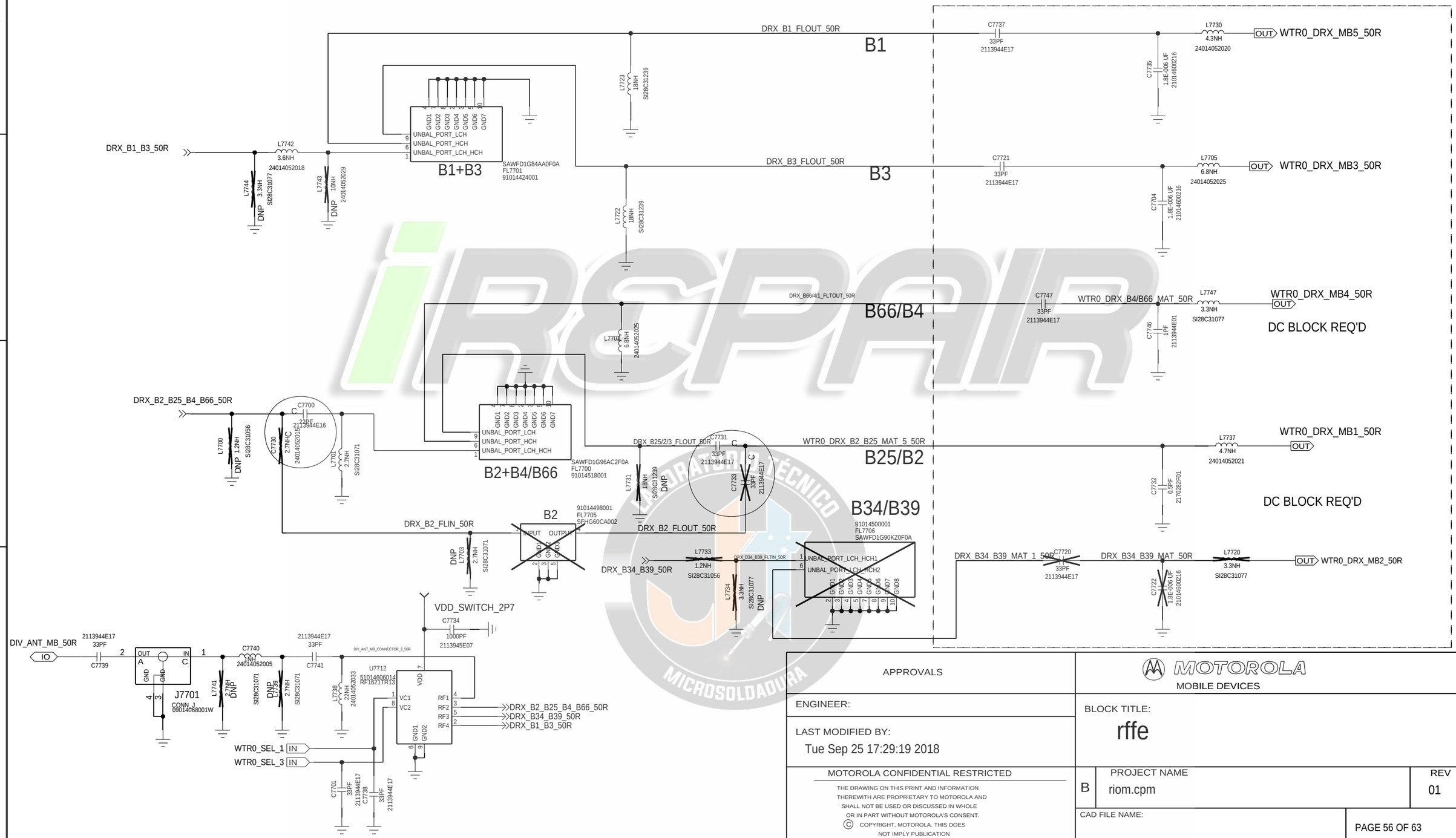

APPROVALS	MOTOROLA MOBILE DEVICES	
ENGINEER:	BLOCK TITLE: rffe	
LAST MODIFIED BY: Tue Sep 25 17:29:19 2018		
MOTOROLA CONFIDENTIAL RESTRICTED THE DRAWING ON THIS PRINT AND INFORMATION THEREWITH ARE PROPRIETARY TO MOTOROLA AND SHALL NOT BE USED OR DISCUSSED IN WHOLE OR IN PART WITHOUT MOTOROLA'S CONSENT. © COPYRIGHT, MOTOROLA. THIS DOES NOT IMPLY PUBLICATION	B — PROJECT NAME: riom.cpm	REV: 01
	CAD FILE NAME:	PAGE 56 OF 63

iRCPAIR
LABORATORIO TÉCNICO MICROSOLDADURA

RFFE: LB_DRX_B5,8,12,13,17,20,26,28,GSM850/900
REF 7750-7799

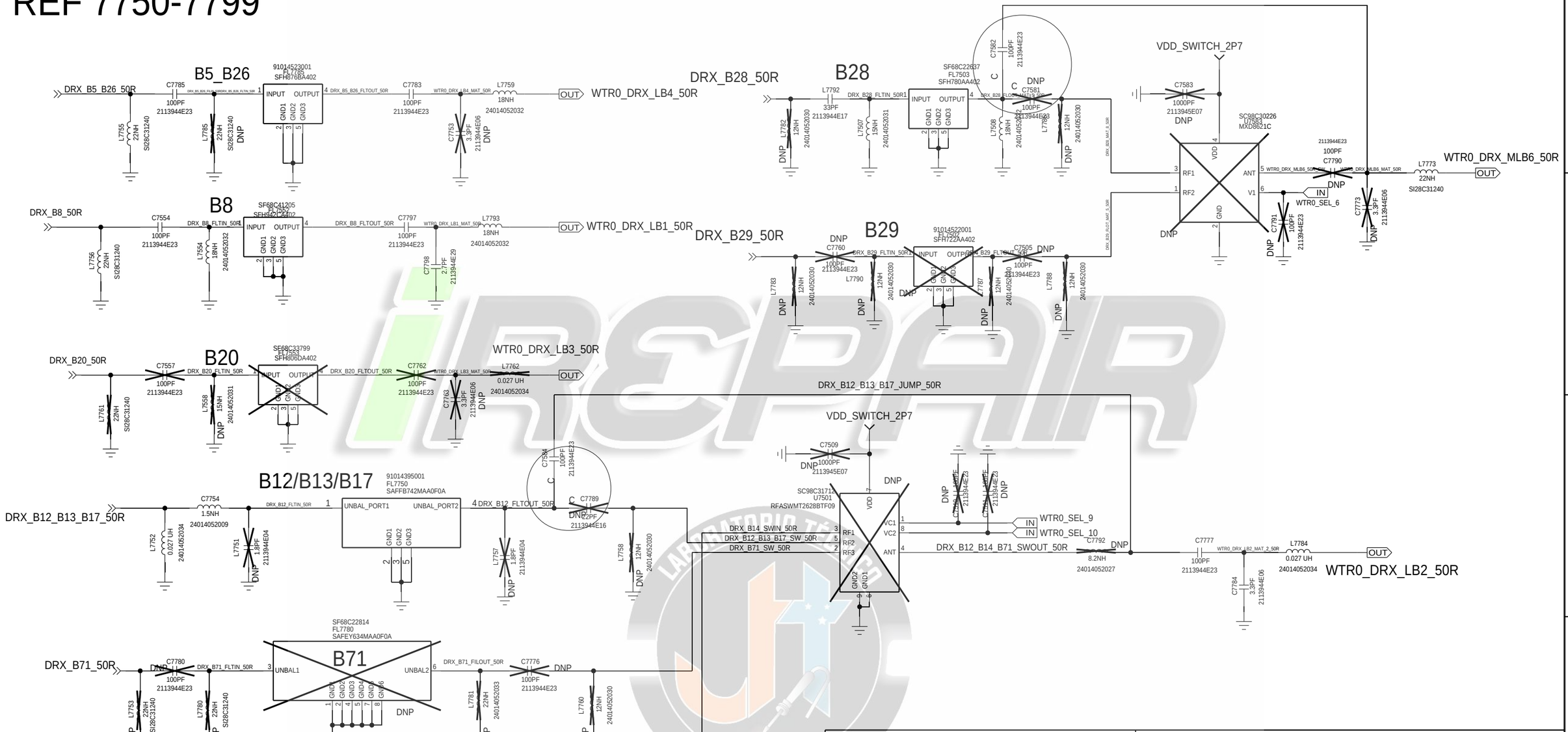

APPROVALS	MOTOROLA MOBILE DEVICES	
ENGINEER:	BLOCK TITLE: rffe	
LAST MODIFIED BY: Tue Sep 25 17:29:21 2018		
MOTOROLA CONFIDENTIAL RESTRICTED	B — PROJECT NAME: riom.cpm	REV: 01
THE DRAWING ON THIS PRINT AND INFORMATION THEREWITH ARE PROPRIETARY TO MOTOROLA AND SHALL NOT BE USED OR DISCUSSED IN WHOLE OR IN PART WITHOUT MOTOROLA'S CONSENT. © COPYRIGHT, MOTOROLA. THIS DOES NOT IMPLY PUBLICATION	CAD FILE NAME:	PAGE 57 OF 63

iREPAIR LABORATORIO TÉCNICO MICROSOLDADURA

RFFE: GPS
REF7800-7899

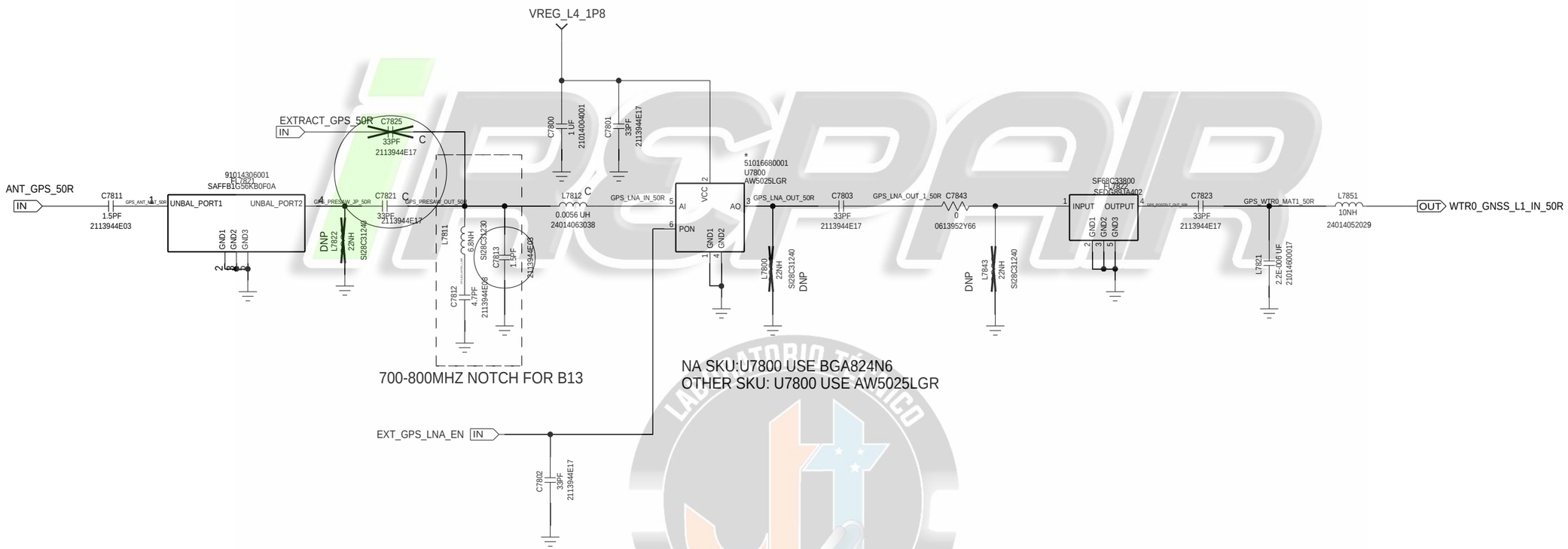

APPROVALS	MOTOROLA MOBILE DEVICES
ENGINEER:	BLOCK TITLE: rffe
LAST MODIFIED BY: Tue Sep 25 17:29:20 2018	
MOTOROLA CONFIDENTIAL RESTRICTED	B — PROJECT NAME: riom.cpm — REV: 01
THE DRAWING ON THIS PRINT AND INFORMATION THEREWITH ARE PROPRIETARY TO MOTOROLA AND SHALL NOT BE USED OR DISCUSSED IN WHOLE OR IN PART WITHOUT MOTOROLA'S CONSENT. © COPYRIGHT, MOTOROLA. THIS DOES NOT IMPLY PUBLICATION	CAD FILE NAME:

RFFE: QFE4101&TI DCDC
REF7900-7949

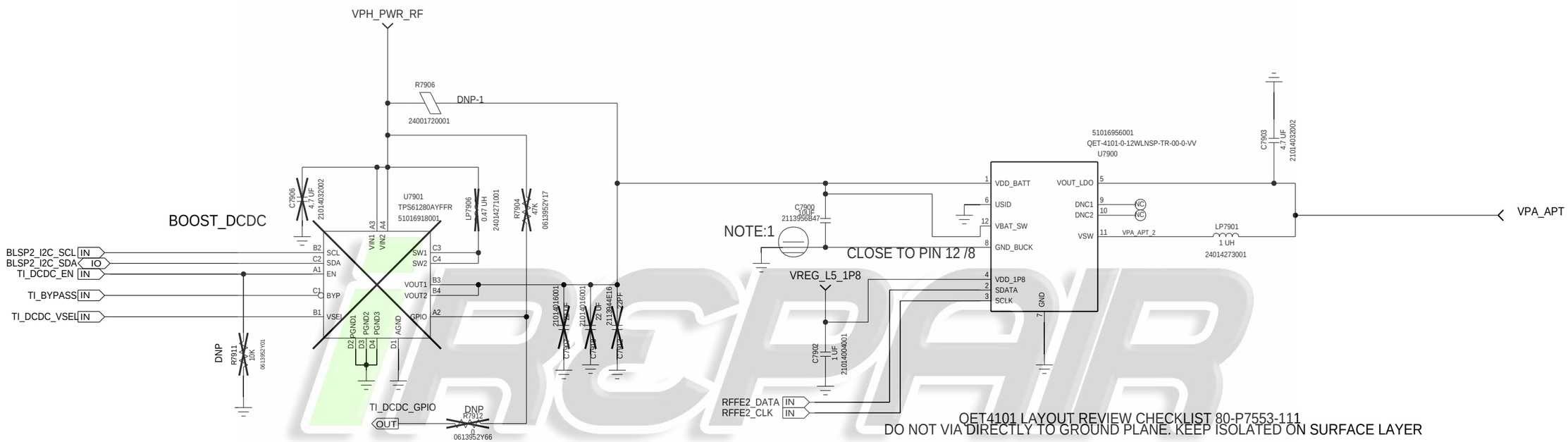

APPROVALS	MOTOROLA MOBILE DEVICES	
ENGINEER:	BLOCK TITLE: rffe	
LAST MODIFIED BY: Tue Sep 25 17:29:19 2018		
MOTOROLA CONFIDENTIAL RESTRICTED	B	PROJECT NAME: riom.cpm	REV: 01
THE DRAWING ON THIS PRINT AND INFORMATION THEREWITH ARE PROPRIETARY TO MOTOROLA AND SHALL NOT BE USED OR DISCUSSED IN WHOLE OR IN PART WITHOUT MOTOROLA'S CONSENT. © COPYRIGHT, MOTOROLA. THIS DOES NOT IMPLY PUBLICATION	CAD FILE NAME:	PAGE 59 OF 63

LABORATORIO TÉCNICO MICROSOLDADURA

8000:antennas

REF 8000-8049

ANT MAIN (LMB)

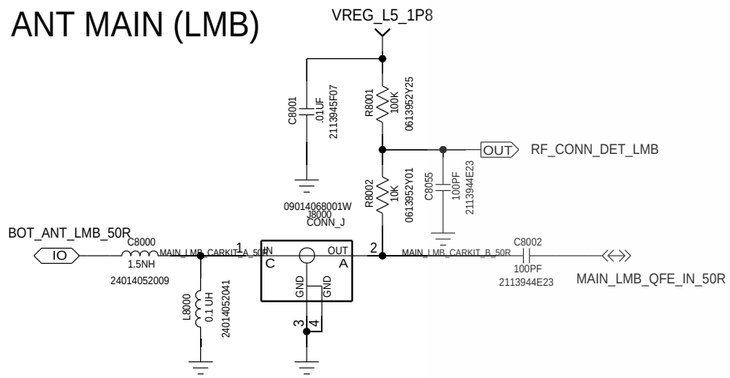

ANT_WIFI 2.4G/GPS/DRX MB

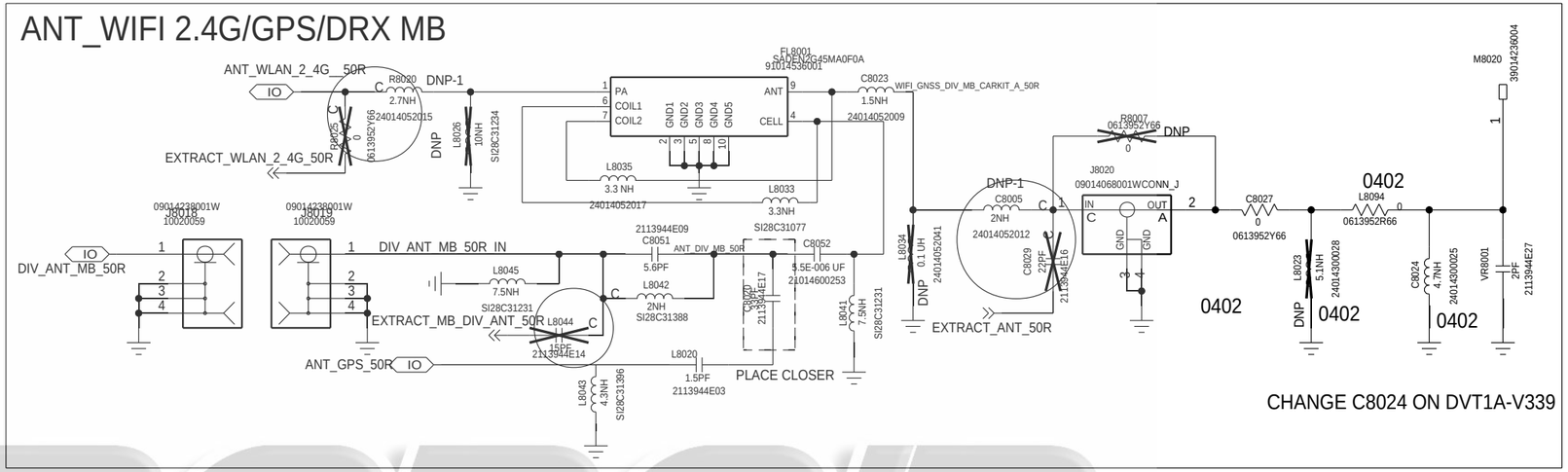

CHANGE C8024 ON DVT1A-V339

ANT MAIN (HB)

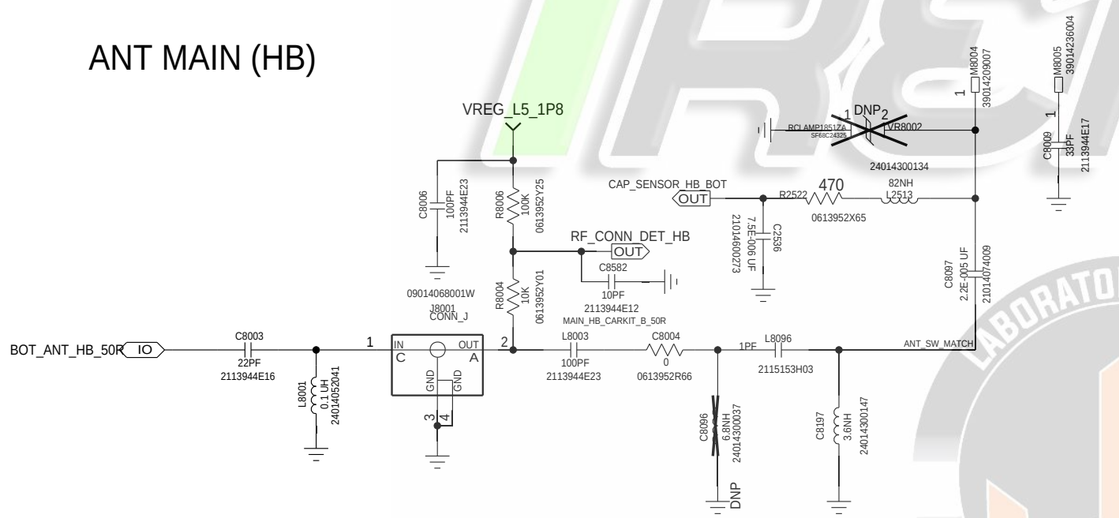

CHANGE C8024 ON DVT1A-V339

ANT_WIFI_5G

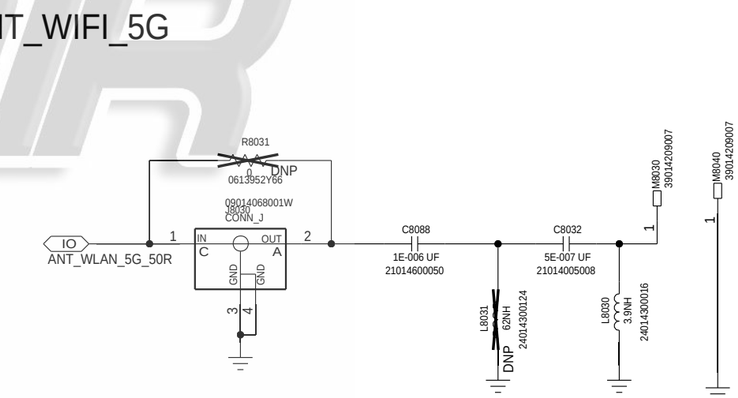

ANT DRX HLB

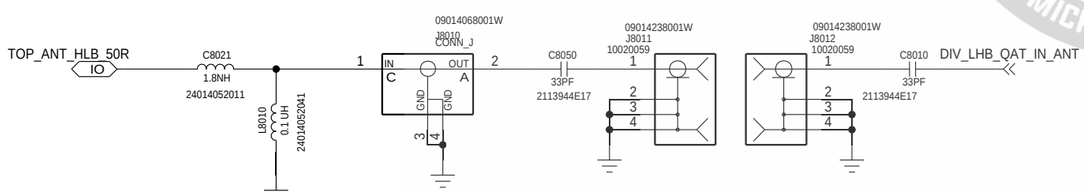

APPROVALS	MOTOROLA MOBILE DEVICES	
ENGINEER:	BLOCK TITLE: antennas	
LAST MODIFIED BY: Tue Sep 25 17:29:09 2018		
MOTOROLA CONFIDENTIAL RESTRICTED	B	PROJECT NAME: riom.cpm — REV: 01
THE DRAWING ON THIS PRINT AND INFORMATION THEREWITH ARE PROPRIETARY TO MOTOROLA AND SHALL NOT BE USED OR DISCUSSED IN WHOLE OR IN PART WITHOUT MOTOROLA'S CONSENT. © COPYRIGHT, MOTOROLA. THIS DOES NOT IMPLY PUBLICATION	CAD FILE NAME:	PAGE 60 OF 63

iREPAIR LABORATORIO TÉCNICO MICROSOLDADURA

MAIN ANT

REF: 8050-8069

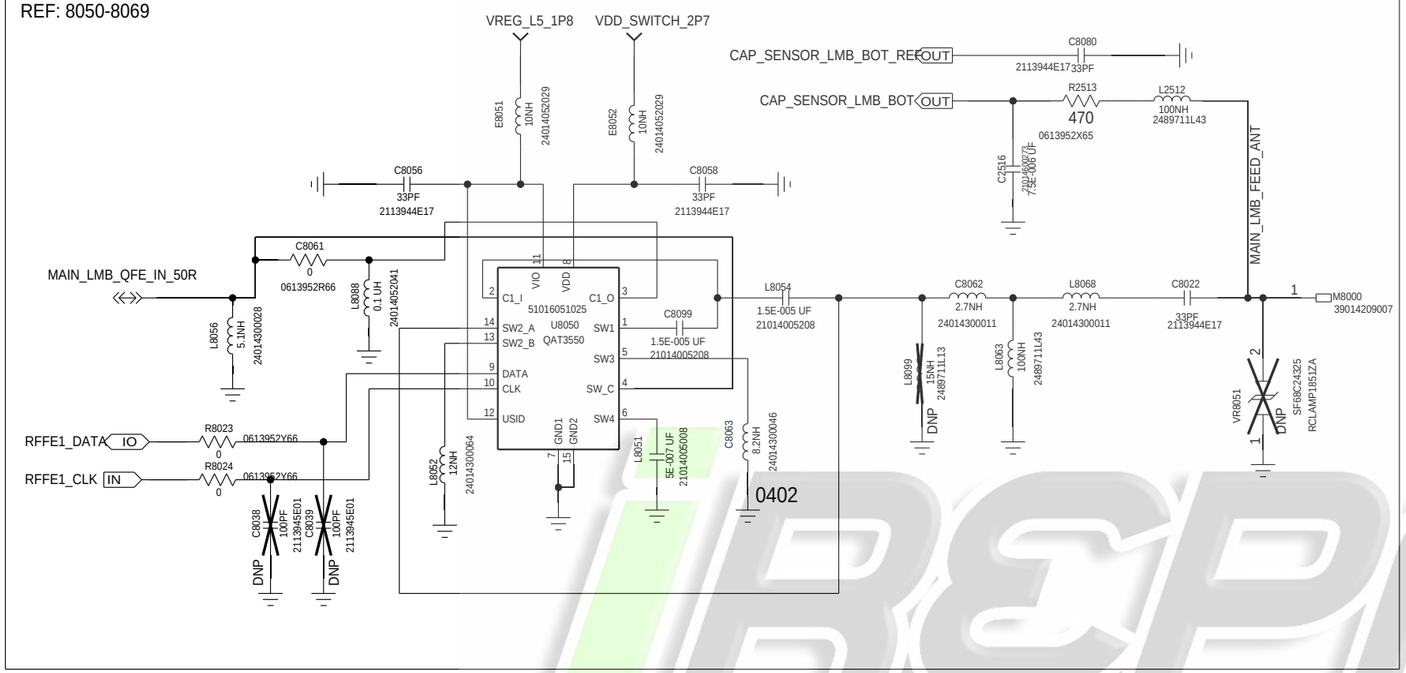

EXTRACT

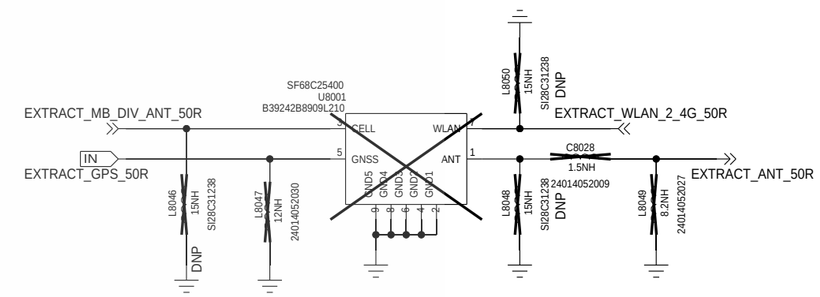

DIV ANT

REF: 8070-8099

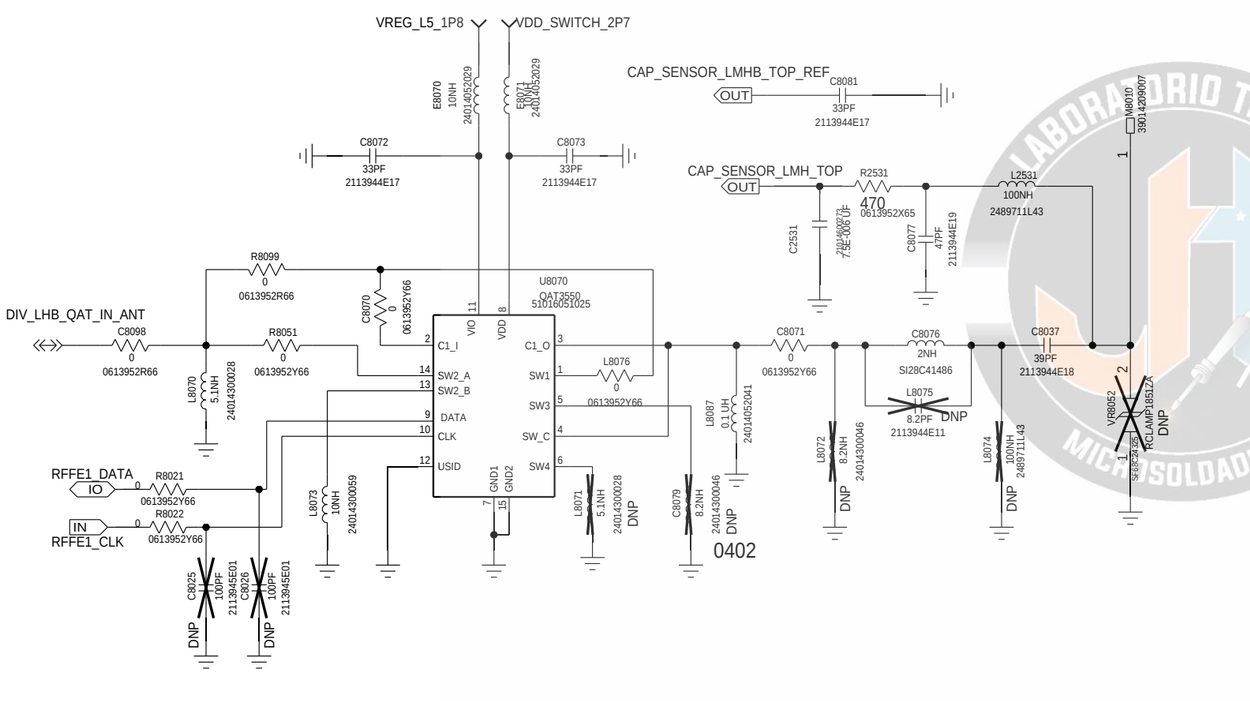

iREPAIR
LABORATORIO TÉCNICO MICROSOLDADURA

APPROVALS	MOTOROLA MOBILE DEVICES	
ENGINEER:	BLOCK TITLE: antennas	
LAST MODIFIED BY: Tue Sep 25 17:29:09 2018		
MOTOROLA CONFIDENTIAL RESTRICTED	B — PROJECT NAME: riom.cpm	REV: 01
THE DRAWING ON THIS PRINT AND INFORMATION THEREWITH ARE PROPRIETARY TO MOTOROLA AND SHALL NOT BE USED OR DISCUSSED IN WHOLE OR IN PART WITHOUT MOTOROLA'S CONSENT. © COPYRIGHT, MOTOROLA. THIS DOES NOT IMPLY PUBLICATION	CAD FILE NAME:	PAGE 61 OF 63

WCN3660B RF/CTRL

REF 4600-4699

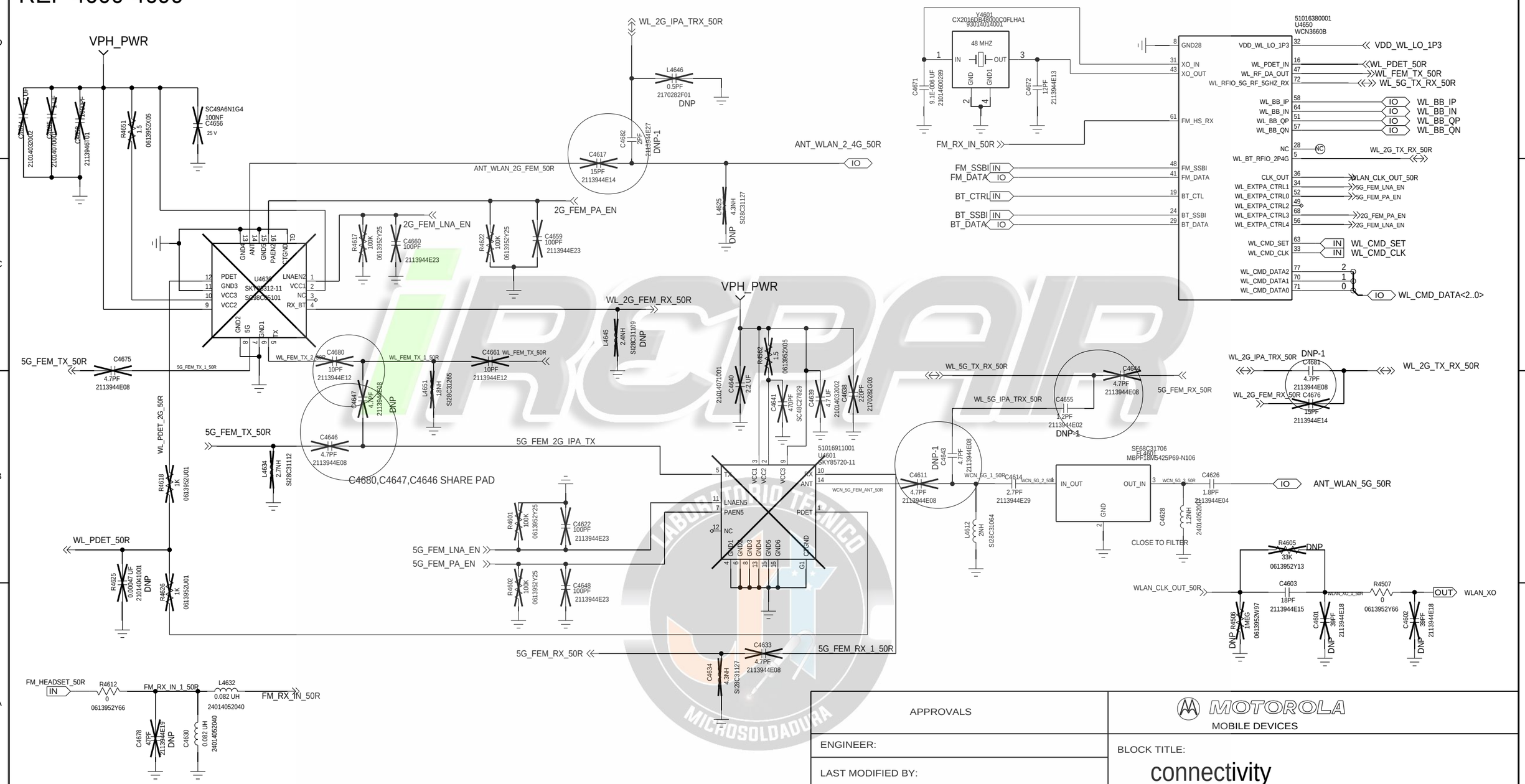

BASED ON 80-WL022-41 REV. A

APPROVALS	MOTOROLA MOBILE DEVICES	
ENGINEER:	BLOCK TITLE: connectivity	
LAST MODIFIED BY: Tue Sep 25 17:29:17 2018		
MOTOROLA CONFIDENTIAL RESTRICTED	B	PROJECT NAME: riom.cpm — REV: 01
THE DRAWING ON THIS PRINT AND INFORMATION THEREWITH ARE PROPRIETARY TO MOTOROLA AND SHALL NOT BE USED OR DISCUSSED IN WHOLE OR IN PART WITHOUT MOTOROLA'S CONSENT. © COPYRIGHT, MOTOROLA. THIS DOES NOT IMPLY PUBLICATION	CAD FILE NAME:	PAGE 62 OF 63

iREPAIR LABORATORIO TECNICO MICROSOLDADURA

WCN3660B POWER AND GND,CONTROL

REF 4700-4799

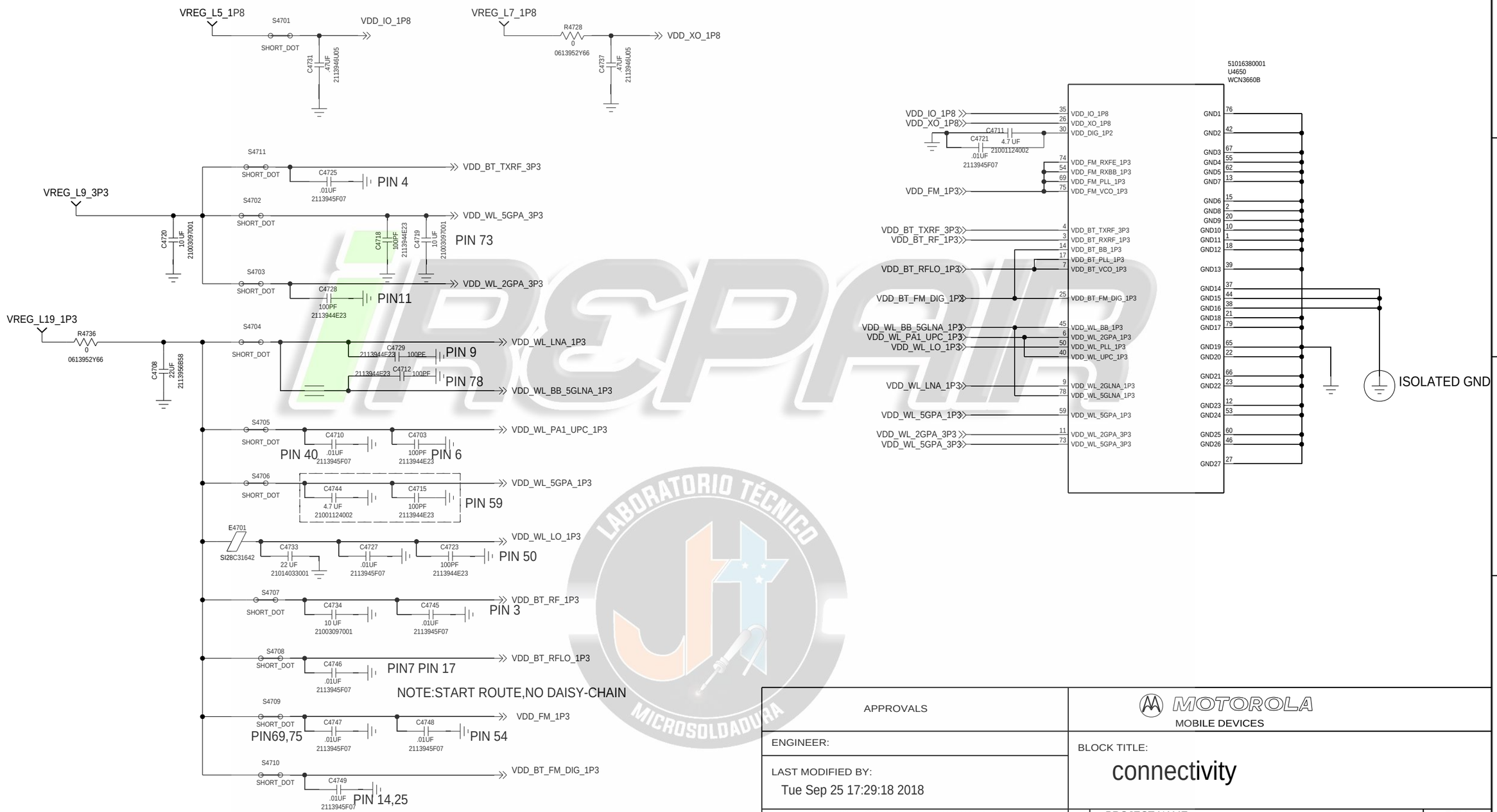

BASED ON 80-WL005-43 REV. YD

APPROVALS	MOTOROLA MOBILE DEVICES	
ENGINEER:	BLOCK TITLE: connectivity	
LAST MODIFIED BY: Tue Sep 25 17:29:18 2018		
MOTOROLA CONFIDENTIAL RESTRICTED	B	PROJECT NAME riom.cpm	REV 01
THE DRAWING ON THIS PRINT AND INFORMATION THEREWITH ARE PROPRIETARY TO MOTOROLA AND SHALL NOT BE USED OR DISCUSSED IN WHOLE OR IN PART WITHOUT MOTOROLA'S CONSENT. © COPYRIGHT, MOTOROLA. THIS DOES NOT IMPLY PUBLICATION	CAD FILE NAME:	PAGE 63 OF 63

LABORATORIO TÉCNICO MICROSOLDADURA